ESCUELA TÉCNICA SUPERIOR DE INGENIEROS INDUSTRIALES Y DE TELECOMUNICACIÓN

Titulación :

INGENIERO TÉCNICO INDUSTRIAL ELÉCTRICO

Título del proyecto:

STUDY OF THE CONNECTION OF A WIND FARM IN WALES

Daniel Solchaga Zaratiegui

Alfredo Ursúa Rubio

Pamplona, 20/06/2011

Study of the connection of a wind farm to the electricity grid in Wales

AUTHOR'S DECLARATION

Statement 1

This work has not previously been presented in any form to the North East Wales Institute of Higher Education or at any other institutional body whether for assessment or for any other purposes. Save for any express acknowledgements, references, and/or bibliographies cited in the work, I confirm that the intellectual content of the work is the result of my own efforts and no other person.

Statement 2

It is acknowledged that the author of this work shall own the copyright. However, by submitting this copyright work for assessment, the author grants to the Institute a perpetual royalty-free license to do all or any of those things referred to in section 16(I) of the copyright, designs and patents act 1988 (viz: to copy work; to issue copies to the public; to perform or show or play the work in public, to broadcast the work or make an adaptation of the work).

Signed: _____

Date: _____

ABSTRACT

The objective of this Project is to study the connection of a wind farm to the electic grid of Wales. This report also contains all the information necessary to understand the calculations made and know where they come theoretically. This document would include the study of how a wind turbine works, the elements those compose it, its principle of operation as well as different kinds of existing generators.

Having explained this, this project will focus on the study of the connection of a concrete wind farm to the electric network of Wales. In one hand also will be described the connection requirements and performance that must meet the wind farm. In the other hand, this dissertation will try to characterize the interaction of a wind power park via a digital simulation (*Matlab- Simulink*).

LIST OF CONTENTS

LIST OF FIGURES

CHAPTER 1: INTRODUCTION

This dissertation consists of the study of the connexion of a wind farm to the electric grid of Wales. To achieve this goal is necessary to do a complete research about what parameters of supply quality which must meet the wind farms in Wales.

It will be studied the case of a 15 MW wind farm comprising by 10 horizontal axis wind turbines with three blades upwind, variable speed, rated power of 1,500 kW,

rated voltage of 12 kV and frequency of 50 Hz. The generator is asynchronous, variable speed and wound-rotor doubly-fed.

It will be analyzed the different responses of the system when the wind farm is connected (dynamic regime) and in normal operation (static regime), In order to complete this study will be used a digital simulation through the *Matlab program* and the effects that will be modelled will be the following:

- Flicker emission during continuous operation.
- Flicker emission during connection operations.
- Variations in tension during connection operations.
- Harmonics.

Other parameters that will be considered will be:

- Thermal capacity of the lines.
- Static tension in the point of connexion.
- The need for compensation of reactive energy.
- Adequate protections.
- Amount of power discharged into the line.

1.1. - AIM

The main objective of this project is to study the possibility of installing a wind farm in Wales, but the ultimate goals is to understand how a wind turbine works, which are the necessary parameters to be considered and how a wind farm interact whit the electric grid. It is also a good goal to understand the *Matlab program* and be able to do simulations with it.

1.2. – OBJECTIVES

The objectives of this project are the next:

1.2.1. - Research:

- Types of wind turbines.
- Components of wind turbines.
- Operation of a wind turbine.
- Current situation of wind energy in Wales.
- Terms of connecting an electric park in Wales.
- *Matlab program*. How it works.

1.2.2. - Design:

- Modelling of a system formed by the electric power grid and wind farm, and further study of its response under either dynamic or static regime, using Matlab program.

1.2.3. - Conclusions.

1.2.4. – Working plan.

December:

Week 7-13, 14- 20: • Finish the report of chapter two. Types, components and operation of wind turbines.

Week 21-27: • Gather information from current situation of wind energy in Wales.

• Record results in the logbook.

Weeks 28-3: • Investigate the various disturbances that can occur in an electrical network.

January:

Week 4-10: • Investigate the various disturbances that can occur in an electrical network.

Week 11-17: • Kinds of disturbances that produce wind farms on electric network.

Week 18-24: • Determine the parameters to take into account to make the connection of a wind farm to the electric grid.

Week 25-31: • Determine the parameters to consider when the park is connected and in normal operation.

February:

Week 1-7: • Technical requirements for connecting wind generation in Wales.

Weeks 8-14, 15-21, 22-28: • Learning to use *Matlab Program.*

March:

Weeks 1-7, 8-14, 15-21, 29-4: • Design a model of a wind electric connection to the electric network using *Matlab Program.*

April:

Weeks 5-11, 12-18: • Test the model using actual data and measure the response of the network. Test the model in different situations.

Weeks 19-25, 26-2: • Conclusions.

May:

Weeks 3-9, 10-16: • Make the final report providing several annexes, revising all references and bind the entire project.

Weeks 17-23, 24-30: • Printing and final revision.

CHAPTER 2. REVIEW OF LITERARTURE. WIND TURBINES. WIND POWER BACKGROUND

2.1. - TYPES OF WIND TURBINES.

Currently there are a huge variety of models of wind turbines, different from each other both by the power supplied and the number of blades or even by way of producing electricity (single or in direct connection to the electric grid). You can set different classifications:

2.1.1. - According to the size.

Small size wind turbines. This group are considered when the power is below than 30 kW. The major manufacturers are in USA (Bergey, Atlantic Orient, etc.).

Medium size wind turbines. It is the most developed and extended. His power is between 30 and 600 kW. The Europeans manufacturers are who dominate the market for this type of machine (NEG MICON, VESTAS, ENERCON, GAMESA MADE, etc.).

Big size wind turbines. They are machines with a power above than a megawatt, this kind of turbines represents the latest technology and all the most important manufacturers develop this machine.

2.1.2. - According to the design.

There are two kinds of wind turbines, the vertical axis design and the horizontal axis design. The vertical axis type is designed like an egg-beater.

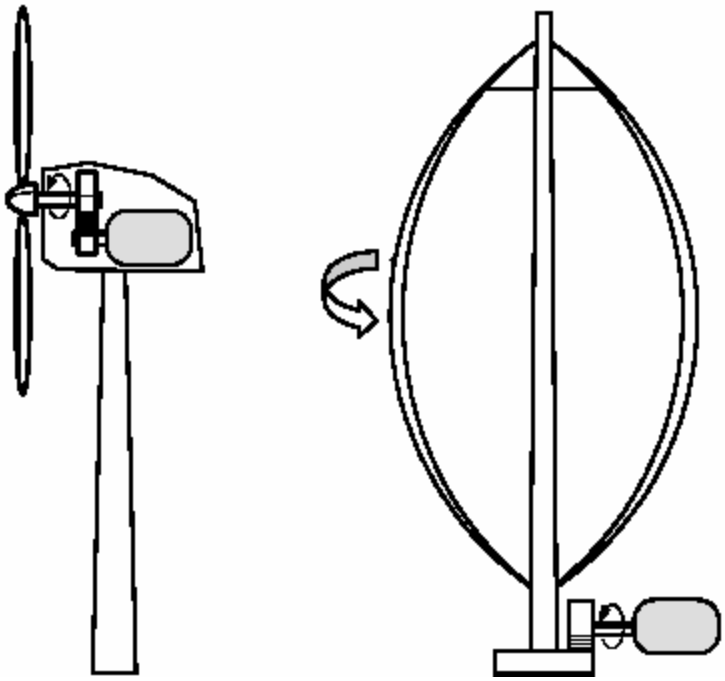

Figure 2.1. Vertical and horizontal axis designs.

2.1. 1. - The horizontal axis design has other classifications:

2.1.1.1. - According to the direction of the wind turbine to the wind.

This is only for horizontal axis wind turbines. The turbine can be windward or leeward. The assembly formed by the nacelle and the rotor can be downwind (leeward), which is his natural position, or against (windward), being the second most common.

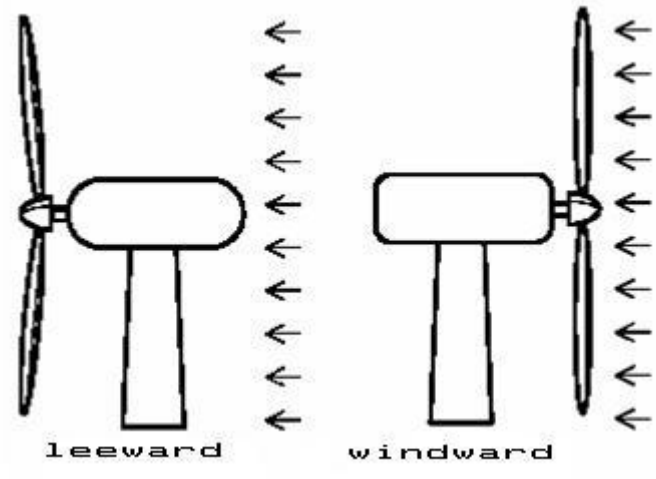

Figure 2.2 – wind turbine types depending on the orientation.

2.1.1.2. – Depending on the number of the blades.

One, two or three blades. In machines of medium and high capacity the most common is the three blades machine.

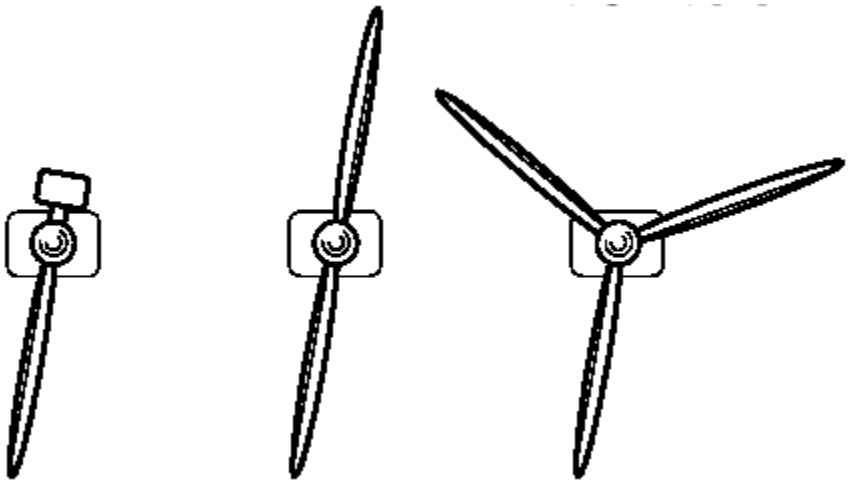

Figure 2.3. – Wind turbine types depending on the number of the blades.

2.1.1.3. – Depending on the type of generation.

1. Fixed speed with directly grid-coupled (asynchronous) squirrel cage induction generator.
2. Variable speed with doubly fed induction generator

3. Variable speed based on a direct drive synchronous generator.

1. A fixed speed turbine consists of a rotor and a squirrel cage induction generator, connected via a gearbox. The generator stator winding is connected to the grid. The generator slip varies with the generated power, so the speed is not, in fact, constant; however, as the speed variations are very small (just 1-2%), it is commonly referred to as a 'fixed speed' turbine. A squirrel cage generator always draws reactive power from the grid which is undesirable, especially in weak networks. The reactive power consumption of squirrel cage generators is therefore nearly always compensated by capacitors.

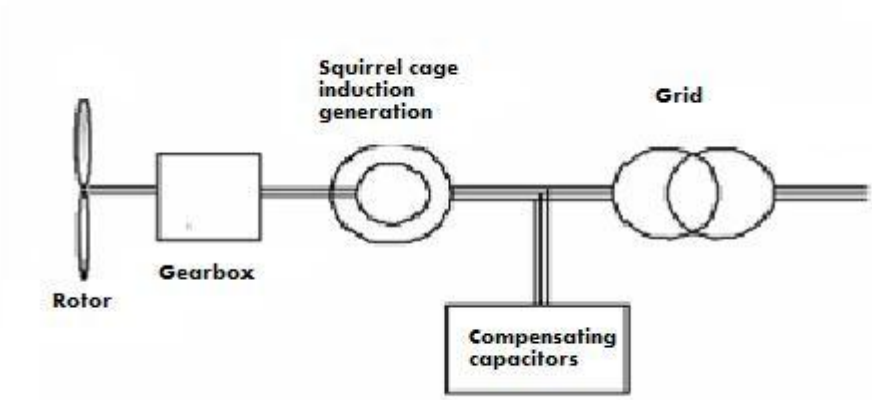

Figure 2.4. – Fixed speed with directly grid-coupled (asynchronous) squirrel cage generator.

2. In a variable speed turbine with doubly fed induction generator, the converter feeds the rotor winding, while the stator winding is connected directly to the grid. The electrical rotor frequency can be varied by this converter, thus decoupling mechanical and electrical frequency and making variable speed operation possible. In a variable speed turbine with direct drive synchronous generator, the generator and the grid are completely decoupled by means of a power electronic converter, also allowing variable speed operation.

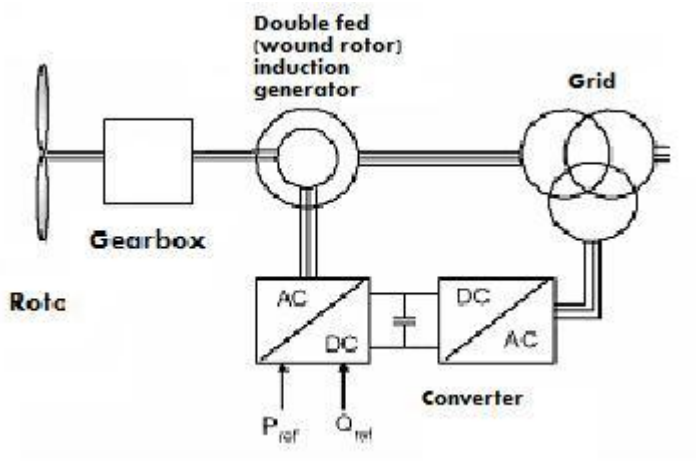

Figure 2.5. – Variable speed with doubly fed induction generator.

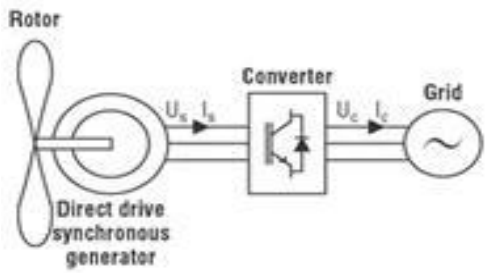

Figure 2.6. – Variable speed based on a direct-drive system and synchronous generator.

The wind turbine that will be used in this project will be the AW-3000. This is a horizontal shaft wind turbine, with three blades, variable speed, rated power of 3000 kW, rated voltage of 12 kV and available for electricity generation in frequencies of 50 or 60 Hz (we use the 50 Hz frequency).

2.2. - COMPONENTS OF WIND TURBINES

The operation of the wind turbine is roughly as follows: The blades through the pitch control system get a variation of its resistance to the wind according to need. When the wind strikes the blades throughout the hub and the blades begin to turn up to a maximum speed of 30 rpm. This shift is multiplied x50 gear in the gearbox and the generator is transmitted through a coupling. The generator through this turn produces electricity at low voltage. This is achieved by introducing energy to the electricity grid through a power converter and a processor that goes from low to high voltage.

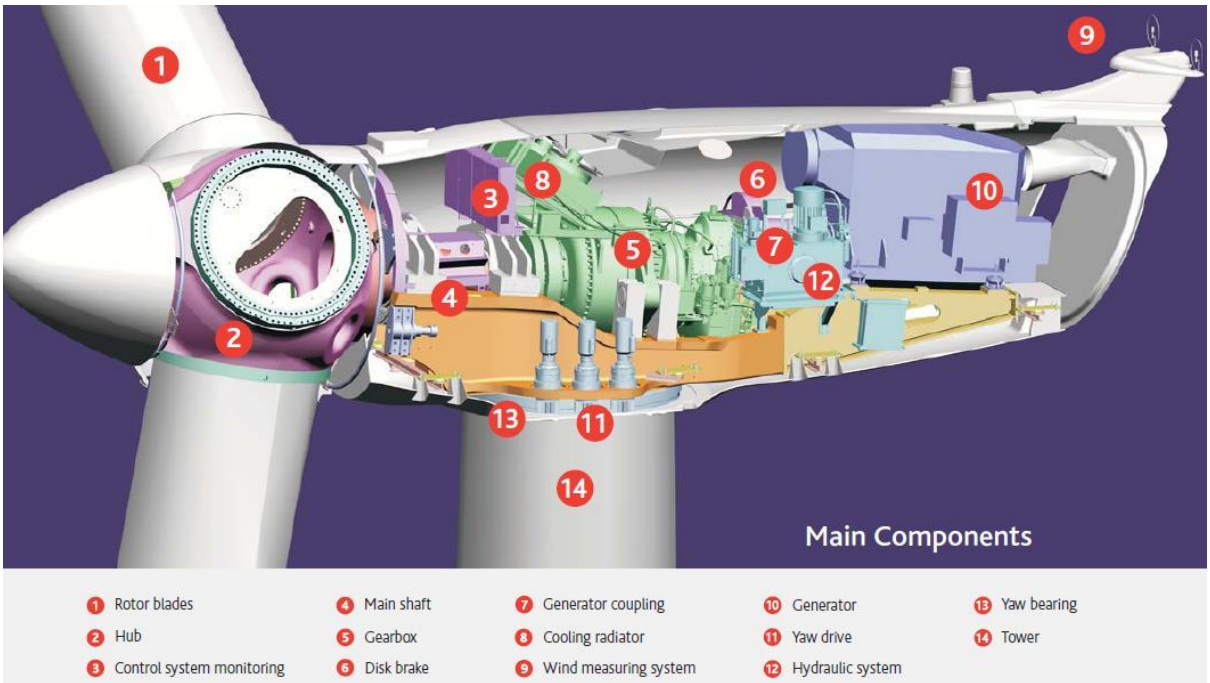

Figure 2.7. – Main components of a wind turbine.

The wind turbine parts that make the process are:

1. Blades:

The system consists of 3 blades of 48.8 meters each and made of polyester-reinforced fiberglass and coated with a special surface protection. The blades are attached to the blade bearing and the bearing in the hub. Each of these unions is consisting of high-strength bolts. Equipped with an independent pitch system that allows the pitch angle of each blade to turn on its horizontal axis, to optimize the

regulation of capacity generated at high winds and increases the safety of the aerodynamic braking system.

Figure 2.8. – Wind turbine blade.

2. Hub:

The hub is the centerpiece to which the blades come together and within it lays the Pitch system mechanism that causes vary the angle of attack of the blades. This mechanism consists of a triangular piece of metal that drives the movement of 3 rods (1 per blade).

Figure 2.9. – Wind turbine hub.

3. Control system monitoring.

4. Main shaft.

It is the hub that supports all efforts. It is joined in the hub and is lean on two bearings housed in a cast iron stand.

5. Gearbox.

There are with parallel axes or planetary stages. It multiplies the turn of the rotor by 50. In front is connected to the main and slow axe and behind is connected to the speed shaft through a coupling. It is resting on shock absorbers in the frame.

Figure 2.10. – Wind turbine gearbox.

6. Disk brake.

Figure 2.11. – Wind turbine disk brake.

1. Generator coupling.

It is a coupling that permits transmission of the rotation with small misalignment between the gearbox and generator.

2. Cooling radiator.

Through a heat exchanger the lubricating oil of the gearbox is refrigerated.

3. Wind measurement system.

The anemometer provides the data control system of wind speed and wind vane will mark the direction. Both have electric heaters to prevent freezing in winter.

Figure 2.12. – Wind turbine anemometer and wind vane.

4. Generator.

Double-fed, three-phase asynchronous induction generator with wound rotor and excitation by collector rings. Generates at medium voltage (12 kV), which reduces losses and avoids the need for a transformer.

11. Yaw drive.

Yaw system uses a gear ring integrated into the tower and six geared motors integrated into the nacelle.

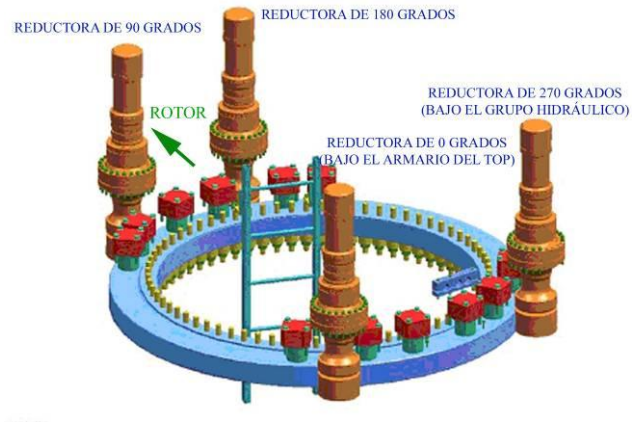

Figure 2.13. – Wind Yaw drive.

12. Hydraulic system.

It provides hydraulic pressure for regulating the pitch and the brake disc.

Figure 2.14. – Wind turbine hydraulic system.

13. Yaw bearing.

A sensor monitors the laps while the gondola tour guides. The sensor has an on-the rolling of power cables which running down the tower. When it comes to 3 turns the machine automatically unrolls. Yaw system uses a gear ring integrated into the tower.

14. Tower.

Concrete tower consists of five sections (100 m). A lift for safe and easier nacelle access is available as an option.

15. Nacelle.

The nacelle is made from fiberglass reinforced polyester. It has a spacious interior with easy access to the hub and the top part. It has a Crane to hoist materials up to 500 kg (1100 pounds) and a robust double frame that reduces the stress on the drive train.

Figure 2.15. – AW-3000 Wind turbine nacelle.

2.3. – OPERATION OF A WIND TURBINE.

The air is a fluid its particles are in gas form. When air moves quickly, in the form of wind, those particles are moving quickly. Motion means kinetic energy, which can be captured, just like the energy in moving water can be captured by the turbine in a hydroelectric dam. In the case of a wind-electric turbine, the turbine blades are designed to capture the kinetic energy in wind. When the turbine blades capture wind energy and start moving, they spin a shaft that leads from the hub of the rotor to a generator. The generator turns that rotational energy into electricity. At its essence, generating electricity from the wind is all about transferring energy from one medium to another.

Wind power all starts with the sun. When the sun heats up a certain area of land, the air around that land mass absorbs some of that heat. At a certain temperature, that

hotter air begins to rise very quickly because a given volume of hot air is lighter than an equal volume of cooler air. Faster-moving (hotter) air particles exert more pressure than slower-moving particles, so it takes fewer of them to maintain the normal air pressure at a given elevation (see How Hot Air Balloons Work to learn more about air temperature and pressure). When that lighter hot air suddenly rises, cooler air flows quickly in to fill the gap the hot air leaves behind. That air rushing in to fill the gap is wind. And if you place an object like a rotor blade in the path of that wind, the wind will push on it, transferring some of its own energy of motion to the blade. This is how a wind turbine captures energy from the wind.

The equation (1) indicates that wind power is proportional to the area swept by the turbine rotor.

$$P_{viento} = 1/2 \cdot A \cdot \rho \cdot V^3 \qquad (1)$$

A : area.

ρ: density of wind.

V: speed of wind.

P wind: power of the wind.

For our turbine: horizontal axis turbine, this area A is circular, A = (π / 2) D², and therefore the power in wind is proportional to the square of the diameter of the blades; doubling the diameter of the blade increases the power available in four in the wind.

The power regulation is determined by the pitch of the blades and also is regulated by the speed of a microprocessor-controlled generator. At low speeds the blade is oriented so that presents a large area in view the prevailing wind direction. As wind speed increases, this surface is reduced by changing the angle of orientation. If wind speed exceeds 25 m / s, the blades are rotated completely to offer the least possible resistance to wind and stop rotating as a security measure. The range of output, thus a wind turbine extends from 4 m / s to 25 m / s or so (see figure 2.16.).

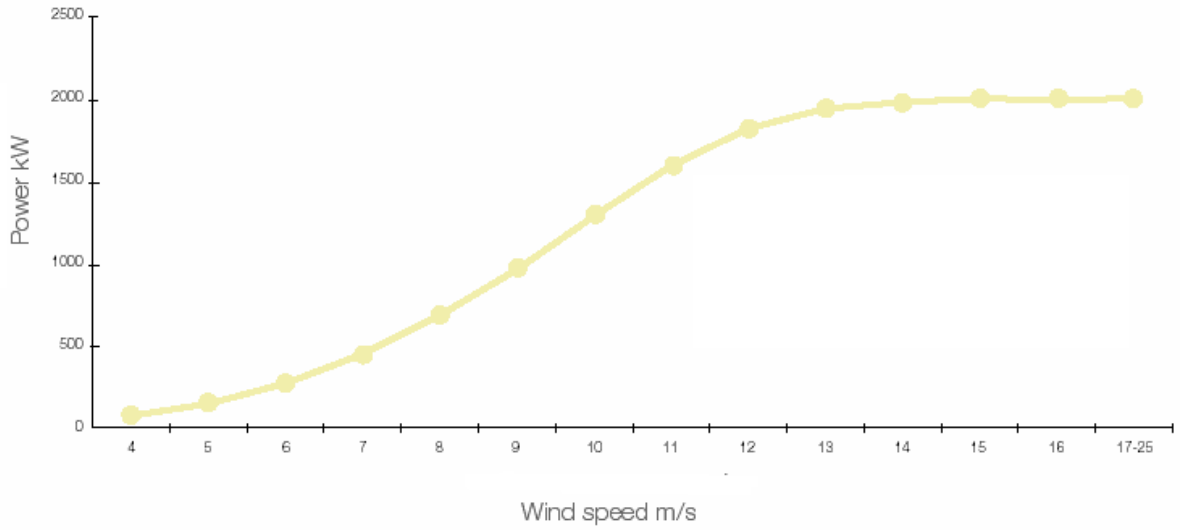

Figure 2.16. – Wind turbine power curve.

When the wind turbine detected in any direction by the wind speed sensor (anemometer), the controller performs the following commands to the wind turbine:

Between 2 to 3 m / s. Send the order to position themselves against the wind. This order is called orientation of the turbine.

From 3 m / s. the microcontroller gives the order to turn off the brakes to allow the rotation of the turbine and start turn by the only effect of the wind.

In variable pitch, the computer also sends the command to the blades for taking a position progressively of 90 º to 0 º. The connection of the generator to the grid is smooth, counting with the electronic power using thyristors. When connecting (it lasts 3 to 4 seconds), is generator connected directly to mains via a switch. In our wind turbine, with variable Pitch the turbine control is done by taking action at the angle passing, catching or limiting the power extracted from the wind. The speed of generation can vary.

In the present project it will be analyzed the different responses of the system when the wind farm is connected. To do this is necessary to know the grid connection requirements for wind power technology (grid codes), concretely, the Wales grid

code, because our wind farm will be connected there. So the next chapter will talk about it.

We can see in the figure 2.17. that the generating power in a wind turbine is not constant. This is because the energy depends on the wind speed which is variable with the turbulences of the wind. The power also depends in the position of the blades and when this energy goes through the impedances the voltage can vary.

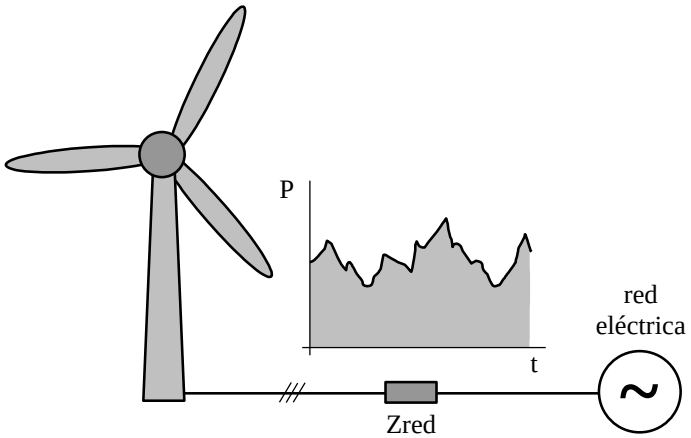

Figure 2.17. – Variation of the electric power in a wind turbine.

CHAPTER 3: GRID CONNECTION REQUIREMENTS FOR WIND POWER TECHNOLOGY IN WALES.

The connection issues for the network are related to grid stability which is influenced by power flows and wind farm behaviour in case of network faults. Advanced simulation tools have been developed in recent years to investigate network stability in critical conditions, thereby simulating the behaviour of wind power plants with their specific control properties. The addition of wind power to these networks creates new loading situations, changed power flow directions etc. which affect operation of network control and protection equipment, and necessitate modification of design and operational practices.

The grid connection rules and system stability is discussed in paragraph 3.1. Power Quality for wind power plants in Wales are described in paragraph 3.2..Wind energy technology solutions for grid integration are presented in paragraph 3.3. Finally, the study of our concrete case are analyzed in the chapter 4 and 5.

3.1. - GRID CONNECTION RULES AND SYSTEM STABILITY IN WALES.

When you connect a wind farm to the electric grid a change in the load grid voltage is produced. Because of that, a careful voltage management is required in order to achieve a correct operation of the electric network. So the voltage control is one of the most important activities when you connect the wind plant and a deeply understood of the interaction between the electricity grid and the farm and their effects on the dynamic system is necessary. This control is doing by the Transmission System Operator (TOS) which is a company that is responsible for the operating, maintaining and developing the transmission system for a control area and its interconnections.

There are some methods to study the dynamic interaction of wind power farms and grids. The present dissertation will tried to study with one of these methods the particular case of connection in the country of Wales, concretely in the North of the country. To achieve that it should be described all the parameters that the British legislation requires and also is needed to know about the particularly electricity

networks that exits there. In order that the following paragraph will describe the characteristics and peculiarities of the electric network of Wales.

The transmission system operator imposes the requirements that the wind farm needs to fulfill. Those grids codes are different and specifics in each country and they are very important in order to keep the proper operation of the electric system and to avoid negative impacts on the electric network. Nowadays in Europe there are many countries whit high technology and this specific rules and codes are being developed quickly. This fact allows a larger implantation of wind energy and a better maintenance of the system.

The electric power system can be divided into the distribution, sub-transmission, and transmission systems. Firstly the transmission system connects electric power generating stations, like wind power farms, and large substations. The most common transmission voltages in use are 400 and 275 kV. In these substations called Grid Supply points, the sub-transmission system transmits the energy for regional distribution and usually it uses overhead lines with operating voltage of 132 kV.

Finally the system which carries energy from the local substation to individual customers is called the distribution system. The voltage usually is reduced o 33KV or 11 KV.

The energy is transported in the way of three-phase alternating current (AC) at 60 or 50 Hz. Here in Wales is used 50 Hz.

The current operator company in Wales is *Scottish Power Ltd*. A member of this company is *SP Manweb*. Its distribution system is connected to National Grid's electricity transmission system.

There are also connections to the Electricity North West system in the north, the Central Network (West) system in the east and the Western Power Distribution (South Wales) system in the south.

Like all electricity networks the demand on *SP Manweb* distribution varies throughout the day and also over the season. Peak demand on the system generally occurs on a weekend in mid winter and the minimum demand during the summer. The maximum system demand for the SP *Manweb* area for 2008/09 was 3288MW on

Tuesday 6th January 2009 within the half hour ending 17:30 hours. Over the five year period of this Plan, it is estimated that the winter peak demand for the SP *Manweb* area will increase to 3381 MW. [1].

- In order to integrate a wind farm correctly, some aspects have to be into account: [2].

System operation: reserve capacities and balance management, short term forecasting wind power and cross border flow management.

Grid infrastructure aspects: congestion management, specific issues of offshore, extensions and reinforcements and interconnections.

Grid connection of wind power and system transient stability: grid codes and power quality, wind power technology and control issues.

Contribution of wind power to systems adequacy: on generation, energy source and transmission levels.

Market redesign issues to facilitate wind power integration: demand side management, storage, balance settlement rules, time between schedule and delivery at the balance market, etc.

Institutional issues: vertical integration, legal and ownership unbundling, incentives of stakeholders, non discriminatory third party grid access, socialization of costs and change in approach and attitude.

3.2. – INTERACTION WITH THE GRID

The interaction of one wind turbine with the electric network produces the following effects:

The generator effects about the electric grid:

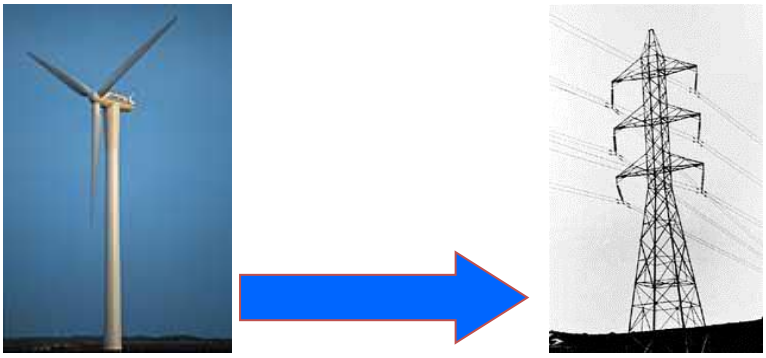

Figure 3.1. Interaction of the wind farm to the grid.

The active and reactive power has a strong dependence of the wind turbine. The quality of the supply also depends on it.

The grid perturbations to the wind turbines:

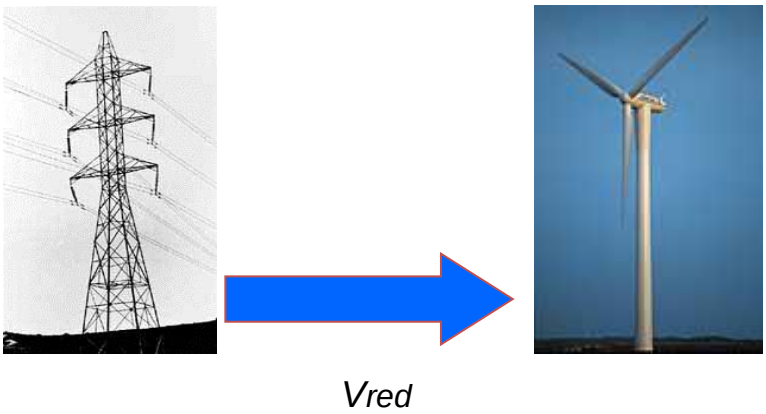

Figure 3.2. Interaction between the grids to the wind farm.

In other side, the grid perturbations affect to the wind turbine and the level of voltage is important in this case.

The power fluctuations produce variations of the current injected into the power grid. This current, passing through the network impedances cause falls (or rises) from impedance voltage network.

3.2.1. – Energy produced by a park

In a wind farm the energy produced by different generators are added and the average energy of the park is the sum of the average energies of each generator but the fluctuations are not added because it does not occur at once in all generators. The power fluctuations of the park are larger than those of a generator but the fluctuation on the average power is much lower.

When a medium-big wind farm is connected to the eclectic grid the local disturbances and the effects due to the variability of the wind are not important. Only we have to take into account the global fluctuations of the park, much slower and predictable.

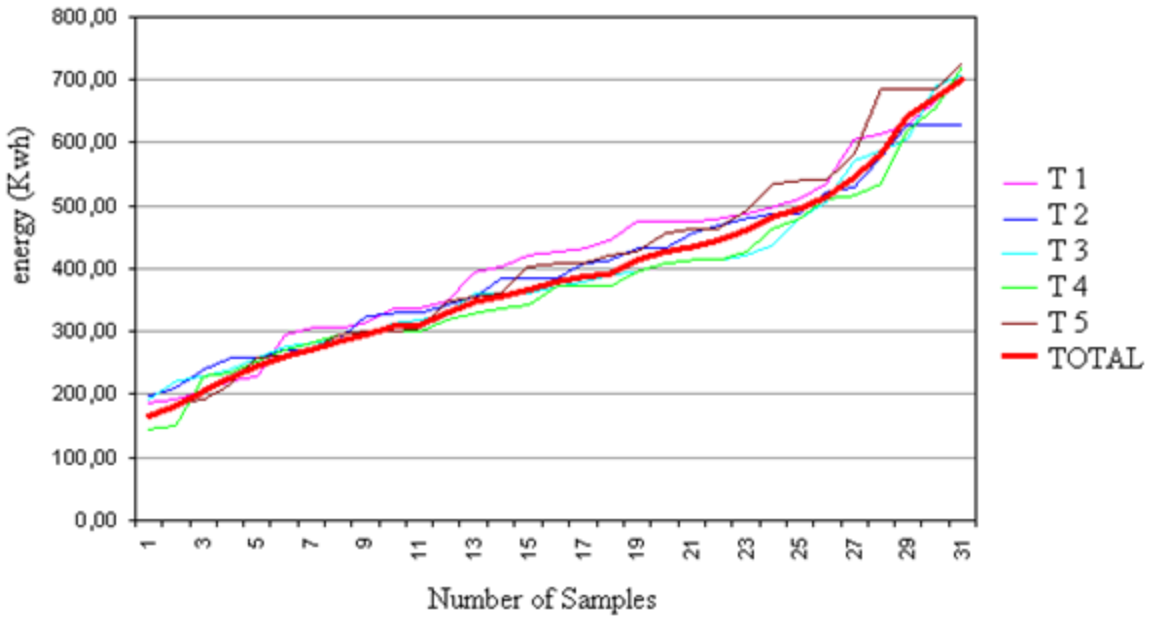

Figure 3.3. - The average power of a wind farm.

The figure 3.3 sows the average of a wind farm consisting in 5 wind turbines. It Is possible to see that the average energy of the park is the sum of the average energies of each generator. If we take different number of samples we can see that the energy in KW*h increase with the time.

In this project the connexion to the grid is done in an overhead line with operating voltage of 132 kV, so it means that the flicker (this phenomenon will be explained in

the next chapter) will be low. The ten wind turbines will be connected in parallel like the figure 3.4.

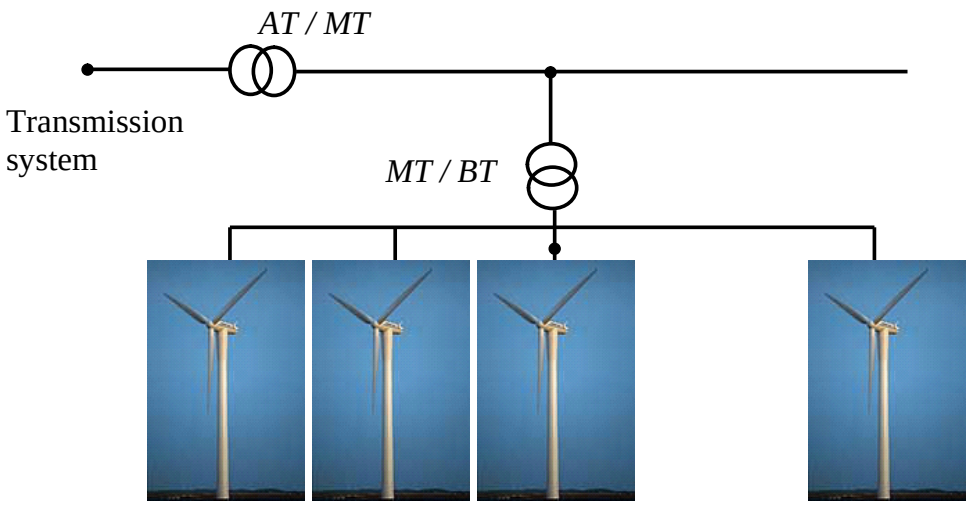

Figure 3.4. – Wind farm connected in parallel to the distribution system of Wales (11 KV).

The same happen to the variability of the voltage. When you increase the number of the turbines this variation will decrease, figure 3.5.

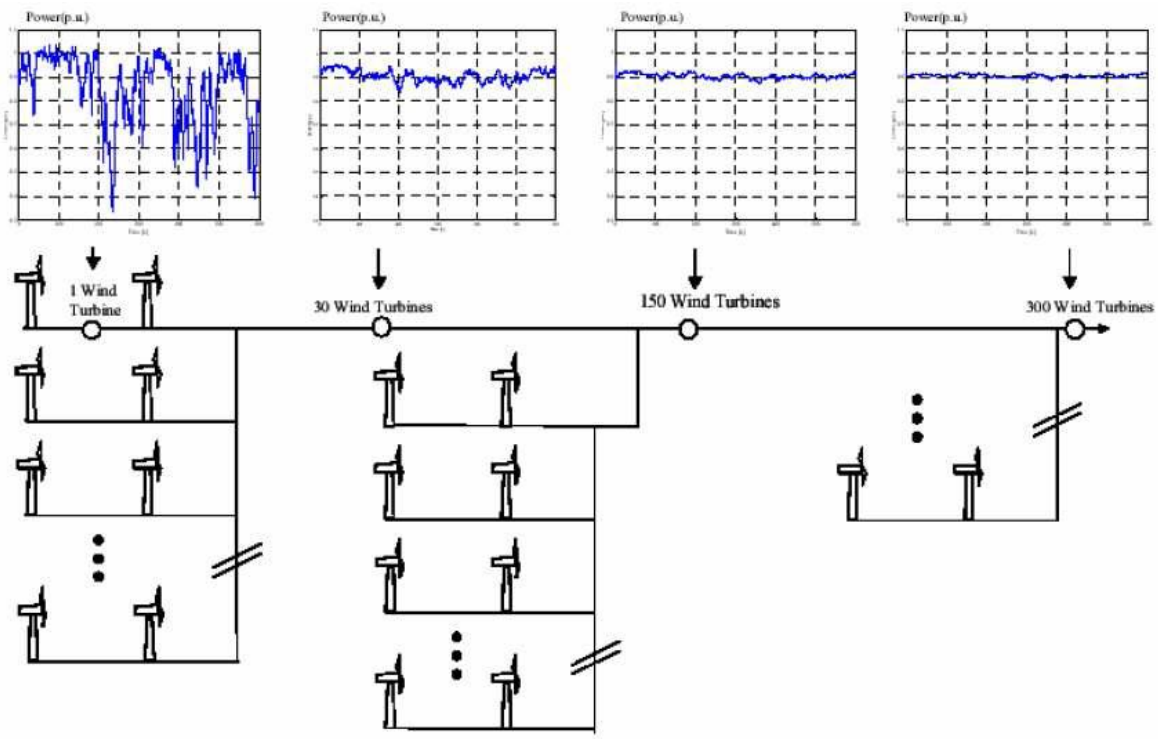

Figure 3.5. - Effect of attenuation of voltage variations in wind farms with increasing the number of turbines.

3.2.2. – Behaviour of the turbine due to electric grid disturbances

In chapter 3.3 the requirements to connect our wind farm to the electric network of Wales will be described. Now the main disturbances which affect the wind turbine are presented:

The fluctuations of voltage amplitude:

With this name are known the slow variations in (RMS) voltage amplitude. These variations are due to consumption (or generation) of active energy and especially reactive power and by law the maximum voltage variation is ~ 10%.

Effects:

- If the voltage increase:

If the machine is connected directly to the network → risk of saturates the machine.

If the connection is made by an investor → the investor can lose control of the flow.

- If the voltage decrease:

To get the same output more current is needed→ overheating problems.

The figure 3.6 shows the fluctuations of voltage of the electric grid.

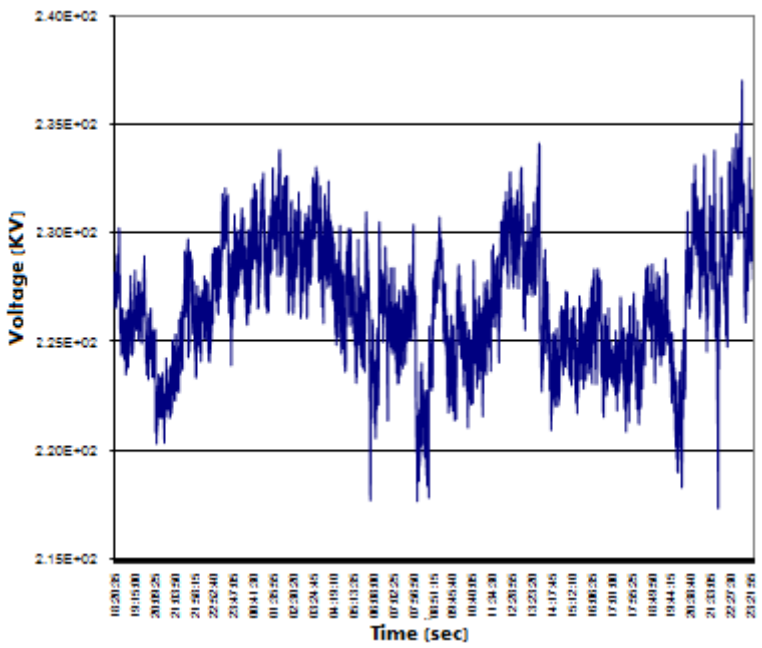

Figure 3.6. - Fluctuations of voltage of the electric grid.

Voltage unbalance:

It is said that the voltage is unbalanced when the three tensions in the three phases are not equal and when the angle between them is not 120 º.

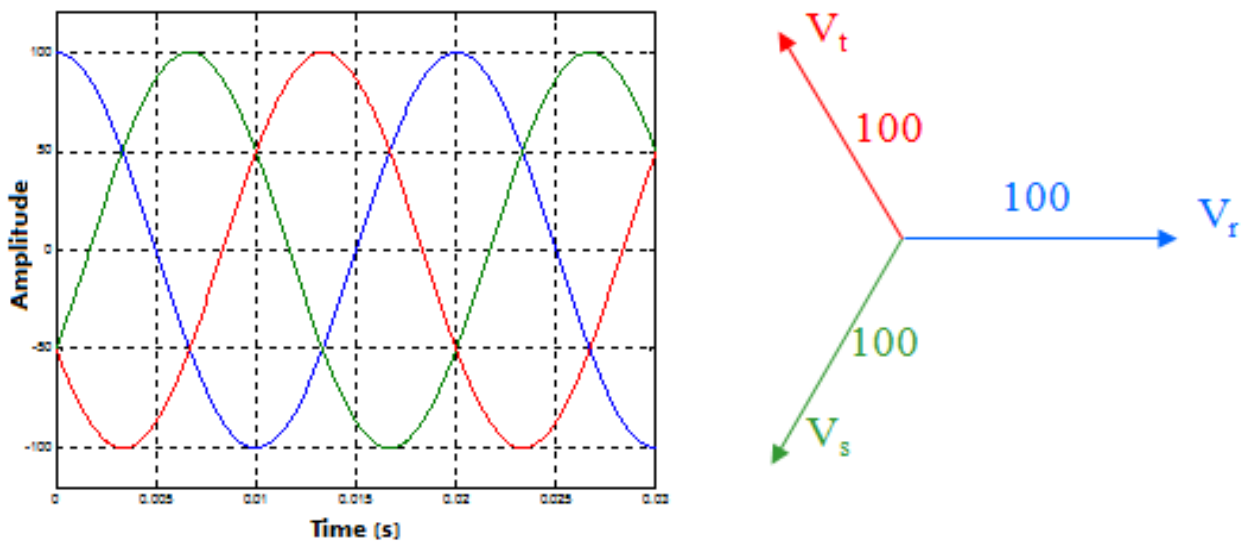

Figure 3.7. - Balanced system.

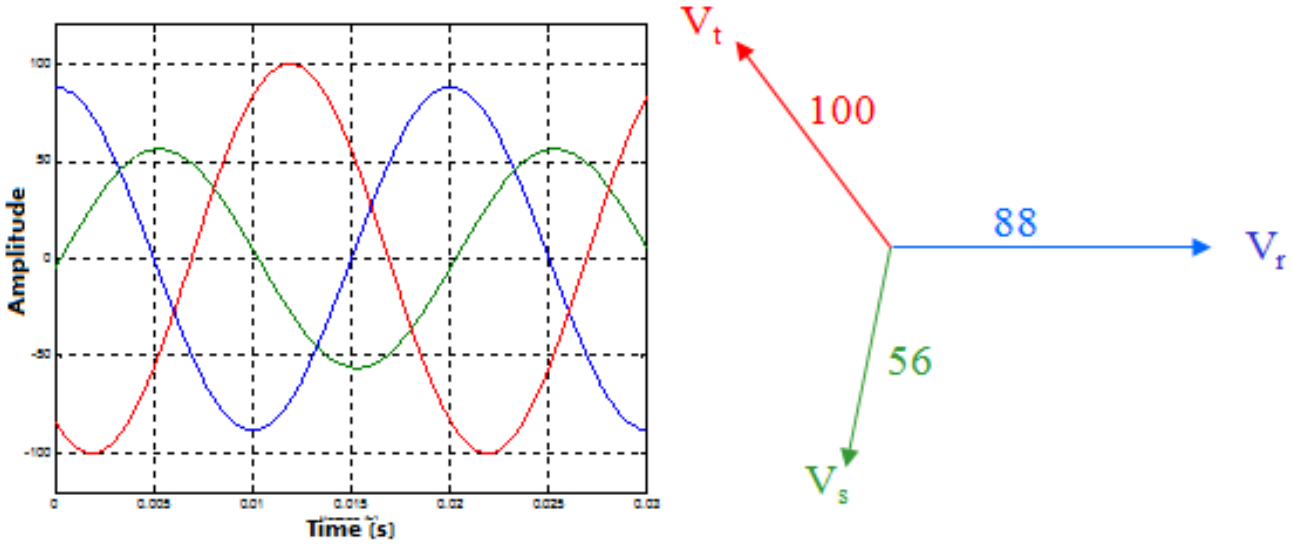

Figure 3.8. – Unbalanced system.

Imbalances occur when consumption is not similar in all three phases.

Different consumptions in each phase→ different currents → different voltage drops in the network inductances.

Normally imbalances appear when the loads are not well distributed and when these loads are big like electric drive systems, Arc ovens and resistance melting ovens.

Voltage dips:

The voltage dips are falls in the supply of one or more phases and its value oscillate between 90% and 1 % of the nominal voltage within 10 ms and 1 minute. It is due a big consumption of current due to the connection of large transformers and transient short circuit caused by earth faults due to branches of trees, water, snow, animals, and etc. Also the voltage dips are caused by the lightning strikes.

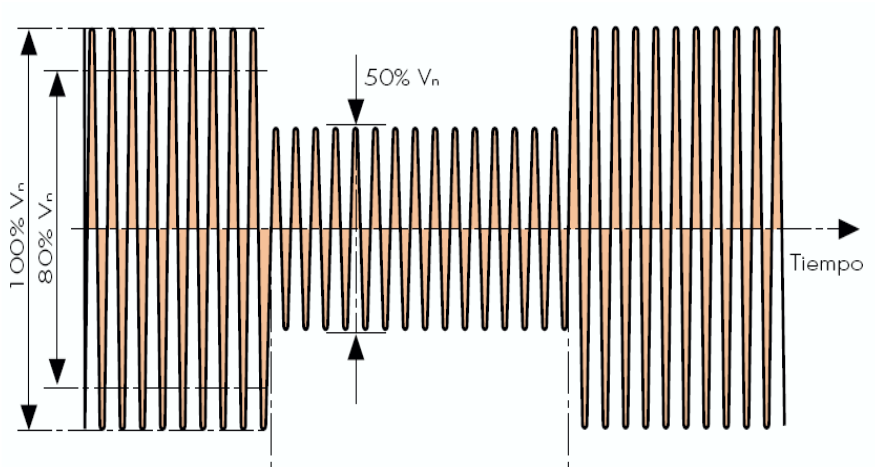

Figure 3.9. – Voltage dip.

Effects:

The first effect is a reduction in power that the generator can deliver to the network, due to the current limitation of the machine and power equipment. Until the pitch does not react, the generator is drawing the same power of the wind but the power evacuated is lower. The power difference is accumulated in the form of kinetic energy in the rotor, so the rotor is accelerated. Also the auxiliary equips can be without supply so normally power batteries are installed to supply automation, control, etc.

3.3. – POWER QUALITY FOR WIND POWER PLANTS IN WALES.

There are some essential requirements in any national grid codes for wind turbines that we have to take into account. They are:

- Active power control.

Several grid codes, like the Wales code, require active wind farm power control in order to ensure a stable frequency in the system and to prevent overloading of lines, etc.

The active and reactive power control depends of the type of the wind turbine generator. In this case, a double fed induction generator is capable of doing a reactive power control, fulfils the requirement of the leading power factor of 0.925

without difficulties, but this generators may have problems with the maximum power output when the lagging power factor of 0.85 is required. This is because in order to fulfil this requirement the frequency increases and the rotor and stator conductors may be damaged.

- Frequency control.

Retention of the frequency in a power system within acceptable limits to ensure the security of supply, prevents the overloading of electric equipment, and fulfils the quality standards.

The requirement of frequency control includes frequency response capability, limitation of ramp rates and active power output. Frequency response is the capability to vary active power output in response to changes in system frequency.

The extreme wind variations and during wind farms start up and shut down cause a large frequency fluctuations and to suppress these fluctuations the Code impose a limitation of positive and negative changes of active power output (ramp rates).

The nominal frequency is normally maintained within a narrow band.

Any deviation from the planned production or consumption moves the frequency away from its nominal value. If the deviation is big enough, the frequency falls out of its normal range and the proper operation of the power system may be damaged.

Other problem with the abnormal frequencies is that the useful lifetime of the insulation of the wind generator will be reduced because of the increase of the temperature in the generator windings. Also the power electronics could be damaged.

Long time ago, when the frequency drop the wind turbines was always disconnected, but because of the increase of the wind turbines farms, this might affect the system's ability, so nowadays the grid code require wind turbines to stay connected and operate at a wider frequency band.

The next figure shows the requirements for frequency range in which power production units should stay on-line. Areas marked in blue depict frequency ranges where wind turbines should be able to operate continuously at full power output. Red

frequency ranges require (time, power output or both) the limited operation of wind turbines, where they should stay connected to contribute to frequency restoration and stable power system operation. The synchronous zones of the UK and Ireland (Figure 3.10) are smaller and having less inertia to prevent large frequency changes.

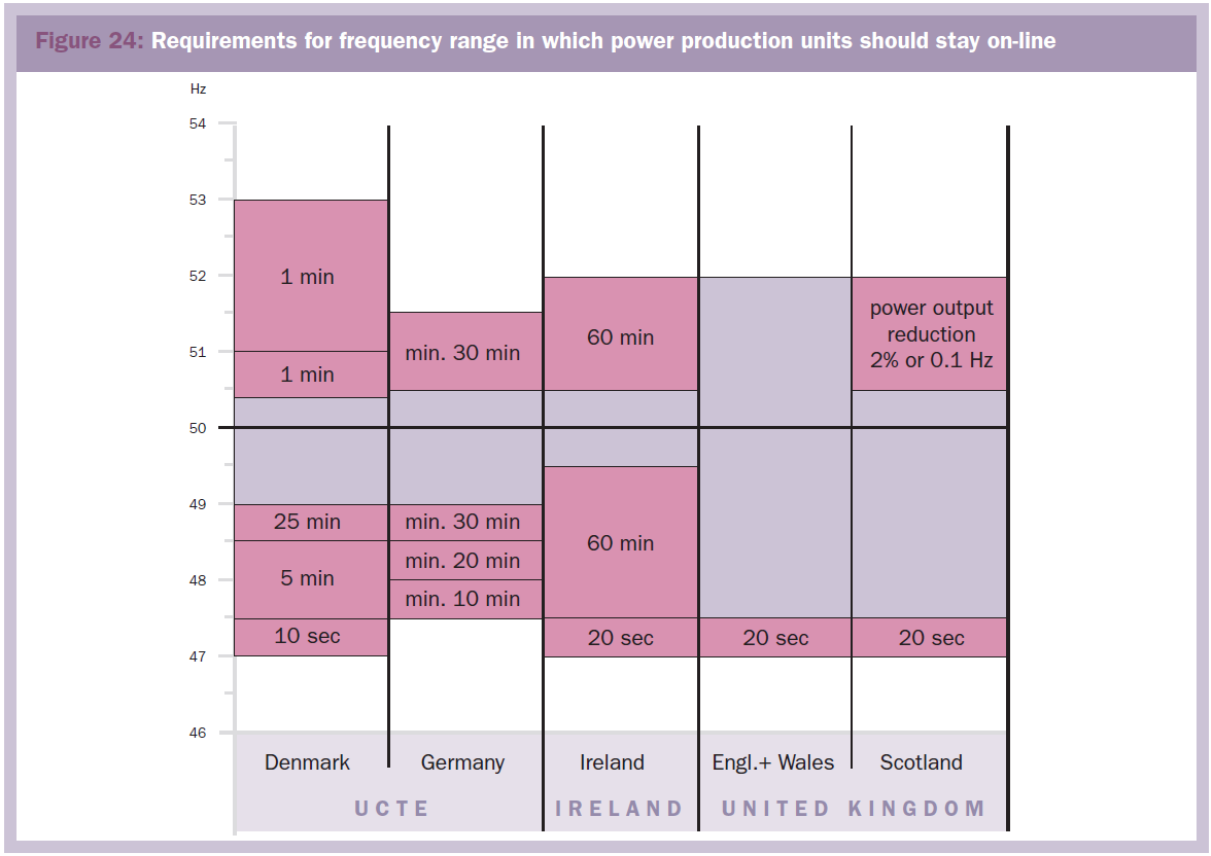

Source: A. Badelin ISET, 2005

Figure 3.10. - Requirements for frequency range in which power production units should stay on-line. [3]

- <u>Voltage control.</u>

This implies requirements for reactive power compensation. The grid codes says is an obligation for wind turbines to operate in a specific range of voltage, to maintain the terminals in a constant voltage too and also is an obligation to stay connected during voltage step changes within the voltage ranges specified.

Other requirement is the wind turbines must be able to supply a proportion of the system reactive capacity and to maintain the reactive power in a good balance.

In this project each individual wind turbines control their terminal voltage to a constant value by means of an automatic voltage regulator. This regulator controls how much reactive power absorbs the generator, protects it especially when a transmission system fluctuation happens. This win farm is capable via its voltage regulator system to control the voltage at the point of connection to a predefined set point of grid voltage.

- Voltage quality.

Rapid changes of voltage, flicker, harmonics, etc. All these perturbations will be described later.

- Tap-changing transformers.

The grid code requires that wind farms are equipped with tap-changing grid transformer in order to be able to vary the voltage ratio between the wind farm and the grid in case of need.

- Wind farm protection.

A relay protection system should be present to act for examples in cases of high short-circuit currents, under voltages, over voltages during and after a fault. This should ensure that the wind farm complies with requirements for normal network operation and supports the network during and after a fault. It should equally secure the wind farms against damages from impacts originating from faults in the network. The so-called fault ride trough (FRT) requirements fall under this category. In the past all wind turbines had to disconnect during faults but now this not happen.

- Wind farm modelling and verification.

Some codes require wind farm owners/developers to provide models and system data, to enable the operator to investigate by simulations the interaction between the wind farm and the power system. They also require installation of monitoring equipment to verify the actual behaviour of the farm during faults, and to check the model.

- Communications and external control.

Unlike the requirements above, national codes are quite unanimous on this point. The wind farm operator should provide signals corresponding to a number of parameters important for the system operator to enable proper operation of the power system (typically voltage, active and reactive power, operating status, wind speed and direction, etc.). Moreover it must be possible to connect and disconnect the wind turbines externally.

Obviously the wind farm of this project will satisfy these requirements. As it is said before the main objective is to develop this suitable model of simulation using *Matlab*. So the following information is about the possibly disturbances which may occur in the normal operation of the wind farm.

There are various types of disturbances that occur in a distribution network as part of the natural operation of the system. These are:

- Flicker.

Voltage flicker is referred to rapid variations in the voltage level on a distribution system. These perturbations are caused by the continually change of the electric grid loads like the frequent switching operations and cyclic variations in embedded generator output currents.

- Voltage step changes.

Voltage step changes occur due to load and generation variations, the operation of tap changers and when the network is reconfigured.

- Voltage dips.

Voltage depressions or dips generally occur due to faults either on the customers own installation, other customer installations, or in the public distribution system due to insulation failure or weather conditions. These disturbances are unpredictable and there no exits specific statutory or license requirements related to voltage dips.

- Short/long term interruptions.

This type of interruption is usually due to grid faults and the associated auto reclose or sequence switching. These interruptions can be typically a few tens annually.

Approximately 70% of them have duration of less than 15 seconds for networks below 132 kV and less than 60 seconds for 132 kV networks. Some interruptions may be longer than a minute and are difficult to give exact durations as they are usually weather related, or due to other external causes.

- Spikes and surges.

Voltage transients or spikes on the supply system are variations from the normal sine wave value.

They usually affect the LV system and are of very short duration. Typically they vary from 100V to 6000V and are of less than a few milliseconds. Typical causes are the operation of capacitors, fuses, opening of contactors, switching of motors or household appliances. Such spikes are mainly produced by the customers' own installations and are rapidly attenuated, rarely penetrating through the distribution transformer.

- Voltage unbalance.

Unbalance in a three phase supply is normally attributable to unbalanced loads and/or impedances.

- Harmonics.

Any non-linear device which take current from or injecting current into the power system will introduce a harmonic current component which will show as distortion of the voltage waveform.

The typically devices which make these perturbations are:

    - Converter equipments, i.e. inverters, UPS's, TV's, Switched power supplies, Wind
    - Turbine generators can contain large inverters, ranging from 30-100% of their rating.
    - Magnetic Devices, i.e. Transformers.
    - Non-Linear loads, i.e. Arc furnaces, dc electrolytic processes.

These incidents cannot be eradicated completely, so that, the United Kingdom Distribution Code imposes obligations to the customers, in our case the wind farm, when you want to connect something to the network. In addition it requires their installations to comply with the following industry standards [3]:

- Engineering Recommendation G5/4 Planning levels for harmonic voltage distortion and the connection of non-linear equipment to transmission and distribution systems in the United Kingdom.
- Engineering Recommendation P28 Planning limits for voltage fluctuations caused by industrial, commercial and domestic equipment in the United Kingdom.
- Engineering Recommendation P29 Planning limits for voltage unbalance in the United Kingdom for 132kV and below.

Other standards and codes that a wind farm must fulfil are the next:

- The United Kingdom code for connection to transmission level.
  - Document reference: Engineering Recommendation G75/1
  - Title: Recommendations for the connection of embedded generating plant to Public distribution systems above 20kV or with outputs over 5MW.
  - Reference, year: Electricity Networks Association 2002.
  - Scope: Large systems of generation.

- The UK code for connection to distribution level follows the next legislation, there are two documents:
- Document a): Engineering Recommendation G59/1.
- Title: Recommendations for the connection of embedded generating plant to the Public Electricity Suppliers distribution systems.
- Organisation: Electricity Networks Association 1991.
- Scope: Embedded (distributed) generation, small systems.
- Document b): Engineering Recommendation G75/1.
- Title: Recommendations for t he connection of embedded generating plant to Public distribution systems above 20kV or with outputs over 5MW.

- Organisation: Electricity Networks Association 2002.
- Scope: Embedded generation (large systems).

3.4. – WIND ENERGY TECHNOLOGY SOLUTIONS FOR GRID INTEGRATION.

The grid code imposes requirements on wind farms at the point of grid coupling. The wind farm controllers almost achieve this but individual wind turbines sometimes also have to fulfil certain requirements. A data acquisition system records the main parameters from the individual wind turbines and from the point of grid coupling. The values which are measured are then used to determine the optimum set points for the individual wind turbines for any electricity grid and weather conditions.

This technique of centralised monitoring and control, based on advanced information and communication technology, allow wind farms to perform various control functions of conventional power plants. In this way, virtual power plant properties [4] are achieved. Major important control functions are:

- Voltage control.
- Active power limitation.
- Ramps rates control.
- Balancing (primary and secondary frequency control).

The wind farm of this project has a control system called Ingecom-W with a master processor of 80 – 386 bits. With this kind of controller all the corrections in order to achieve the maximum efficiency are done. For example if the wind increases the controller give a signal to the pitch to change the position of the blades.

CHAPTER 4. – DESIGN

This is one of the mains chapters of the project. In it the description of the wind farm, the electric network and the model is done. To know the response of the wind farm is necessary to know the parameters of the wind turbines, the grid and also is very important the knowledge about the program software. All the model is based in the figure 4.2.: TheSingle-Line diagram of the wind farm connected to the transmission system of Wales at 132 KV.

The parameters needed to introduce in the model are attached in the appendix d. And the results of this model are discussed in the chapter 5: Discussions and results.

4.1. – DESCRIPTION OF THE WIND FARM.

The wind farm of this project has the follows characteristics:

- Number of turbines: 10
- Total Rated power: 30,000 KW
- Distance of the feeder line: 10 Km
- Type of wind turbine:
    - Power:
        - Rated power: 3000 KW.
        - Rated wind speed: 11.7 m/s
        - Cut-in wind speed: 4.0 m/s
        - Cut-out wind speed: 25.0 m/s
    - Rotor:
        - Diameter: 100.0 m
        - Swept area: 7,853.98 m^2
        - Number of blades: 3
        - Rotor speed: 14.2 rpm
        - Material: carbon fibre reinforced plastic
    - Gear box:
        - Type: combined spur / planetary gear, 2 planetary / helical
        - Stages: 3
        - Ratio: 1:77

- Generator:
  - Type: asynchronous, double fed induction, 6 poles
  - Number: 1
  - Speed: 770 - 1,320 rpm (50 Hz)
  - Voltage: 12,000 V
  - Grid frequency: 50 Hz
- Control and protection system:
  - Power limitation: pitch
  - Speed control: active blade pitch control
  - Main brake: individual blade pitch control
  - Second brake system: disk brake, individual blade pitch control
  - Yaw control system: 6 hydraulic gear motors.
  - SCADA-System: OPMT
- Technical details:
  - Hub height: 100.0 m
  - Shape: conical
- Weight:
  - Single blade: 10.4 t
  - Hub (incl. Installed equipment): 36 t
  - Rotor (incl. hub): 66 t
  - Nacelle (without rotor & hub): 118 t
  - Tower: 850 t
  - Total weight: 1,034 t

❖ Wind turbine parameters in Values Units:

- Power base (S_{base}): 1,500 KVA
- Voltage base (U_{base}): 12,000 V
- Stator resistance (R_s): 0.00539 pu
- Stator leakage reactance (X_{sl}): 0.09062 pu
- Magnetizing reactance (X_m): 3.31065 pu
- Magnetizing reactance (X_m): 0.007616 pu
- Rotor leakage reactance (X_{rl}): 0.100718 pu

- Generator rotor inertia constant (H_g): 0.53273

The ten wind turbines are connected in parallel like the figure 3.4 shows. There are processing centres inside the wind turbines; the energy produced is generated and transported in 12,000 V and then there is an electric underground line of 1 km which connects the wind turbines to the wind farm substation centre. Here the voltage is increased to 132 KV to connect it to the electric regional distribution system of Wales which is managed by *SP Manweb*.

The location of the wind farm is not determined yet because the study has been done to Wales, concretely in all areas where the *SP Manweb* network works. The final place will be one in which the wind conditions and environmental sustainability are adequate. The building area of the wind farm will follow all the specifications that mark British and European law in this regard

4.2. – DESCRIPTION OF THE ELECTRIC GRID.

The previous paragraph talks about the *SP Manweb* network situated in Wales. The map attached in the appendix sows this area. The connection of the substation of the wind farm to the distribution system will be at 12 KV and then the energy could be connected to the transmission system at 132 KV and later is transported to others regions. The main parameters of this network are:

Distribution system:

- Rated voltage: 12,000 V
- Frequency: 50 Hz
- Distance: 1 Km

Transmission system:

- Rated voltage: 132,000 V
- Frequency: 50 Hz

4.3. – DESIGN OF THE MODEL.

The model in this project has to show the interaction between the wind farm and the electric network. It is very important because the proper quality of the supply is very important and both the grid and the wind farm introduce abnormal operation in the system.

The Design of the wind model has been done with Matlab/Simulink. The objective of this model is to be able of see the response of the system in two cases:

- Normal connection of the wind farm to the grid.
- Grid and wind turbine response when a grid fault happens.

To achieve the objective of know how our wind farm interacts with the electric grid of Wales the flow chart provided in the figure 4.2 have to be followed. First the simulator program is chosen; in this case the program is Matlab. Then the wind farm has to be defined in terms of number of wind turbines, type, etc. The grid rule to interconnect the farm has to be known too. Also is necessary to know the characteristics in the connection point of the grid.

In the previous chapters the possible failures and issues which could happen when the connection is done have been described, so the next step is to design the digital model simulation. To do that is necessary to know the function transfers of all the electric system, both of the wind farm and the electric grid. Then after doing the changes and testing needed the final model will be achieved.

At last, with all this transfer functions and the final model simulator all the response graphics could be done. Then the possible issues and the interconnection behavior could be studied. If the electric system doesn’t meet all the grid requirements some solutions will be provide

The design of the simulation digital program has to follow the next flow chart:

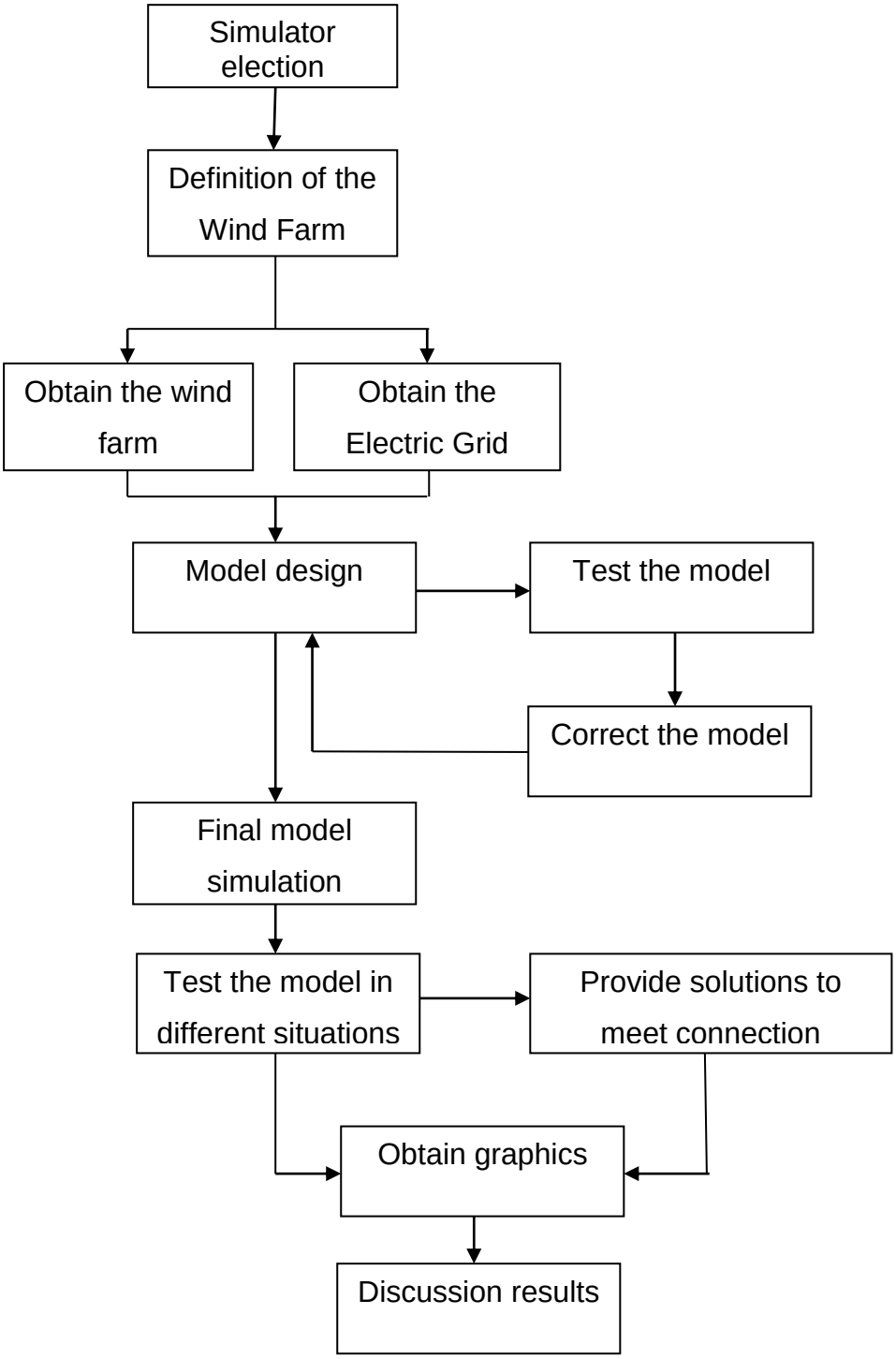

Figure 4.1. - Flow chart.

The Diagram of the wind farm connected to a distribution system is shown in the fig 4.2. It is possible to see how the 30 MW wind farm is connected to the transformation centre. The voltage of the wind farm is 12 KV and the distance of the

line between the wind farm and the centre is 10 Km. Then this transformation centre is connected to the distribution system at the voltage of 132 KV.

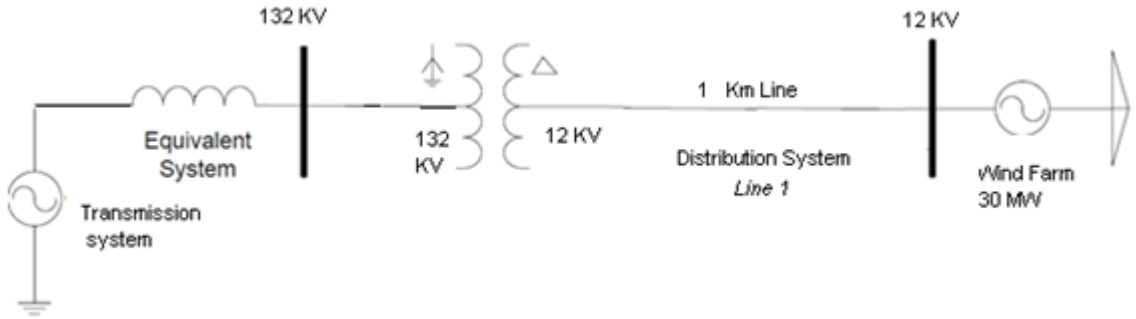

Figure 4.2. – Single-Line diagram of the wind farm connected to the transmission system of Wales at 132 KV

Following the flow chat the first step is to choose the simulator program. There is two options. One is the Matlab software called Simulink. And the other one is an application library of simulink called SimPowerSystem. The program chosen to measure the voltage and currents of the wind turbine and the grid is SimPowerSystem and to know the harmonic response the program used is Simulink.

The ten wind turbines are connected in paralleled to the distribution system by the line called *line 1* (Figure 4.2.). The DFIG technology (Double Fed Induction Generator) is applied in our turbines, the Acciona AW- 3000. To extract maximum power at different wind speeds, the speed of wind generator is required to be varied accordingly to the wind speed. The technology of power electronics (rectifiers, IGBT-based converters) are employed to change the rotor speed and to convert the frequency to that required by wind speeds or grid requirements. Pitch angle of blades of a wind turbine can be adjusted to limit the output power during the gust of wind for protection.

A DFIG consists of a wound rotor induction generator and an AC/DC/AC IGBT-based PWM converter. The block diagram is shown in figure 4.3.

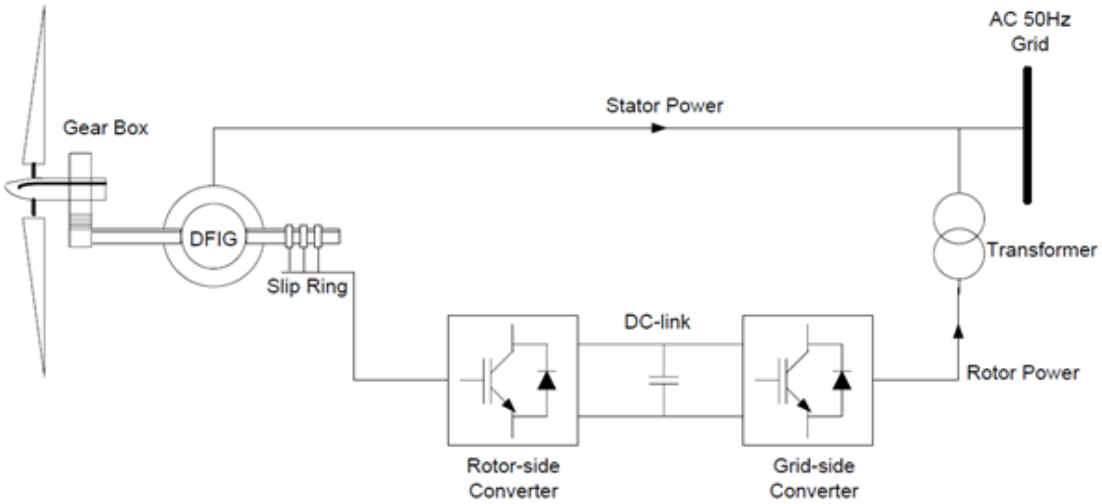

Figure 4.3. – DFIG block diagram.

The stator winding is connected directly to the 50Hz grid while the rotor, which is connected to the rotor-side converter by slip rings and brushes, is fed at variable frequency through the AC/DC/AC converter. The rotor-side and grid-side converters synthesize an AC voltage from a DC voltage source which is acted by a capacitor. A transformer is to step up the voltage to a distribution system [5].

As it is said before there are two cases of study: normal connection of the wind farm to the grid and grid and wind turbine response when a grid fault happens.

4.3.1. - Normal connection of the wind farm to the grid.

It is possible to do that both with Simulink and With SimPowerSystem [6] y [7]. The Block diagram used in simulink is shown in the figure 4.4. The diagram is able to measure the active and reactive power of a Double Feed Induction Generator (DFIG).

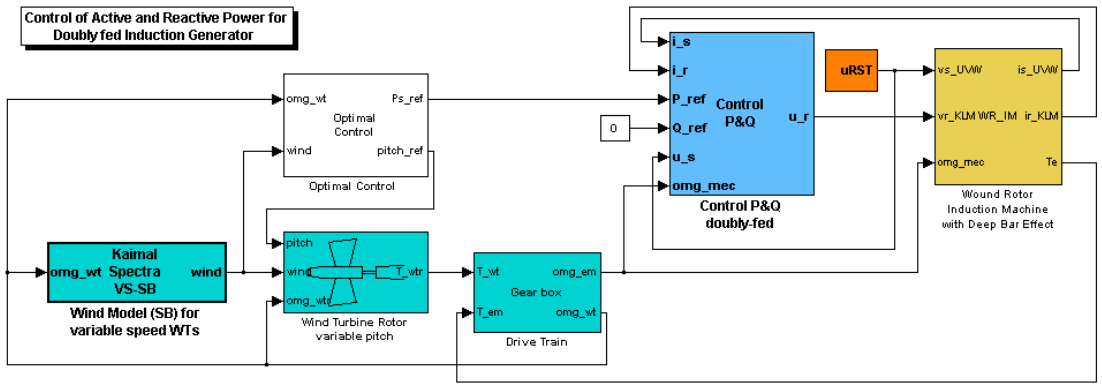

Figure 4.4. - Simulink diagram of a 3 MW wind turbine using DFIG

The diagram of the wind farm connected to the grid designed by SimPowerSystem software of Simulink is shown in figure 4.5.

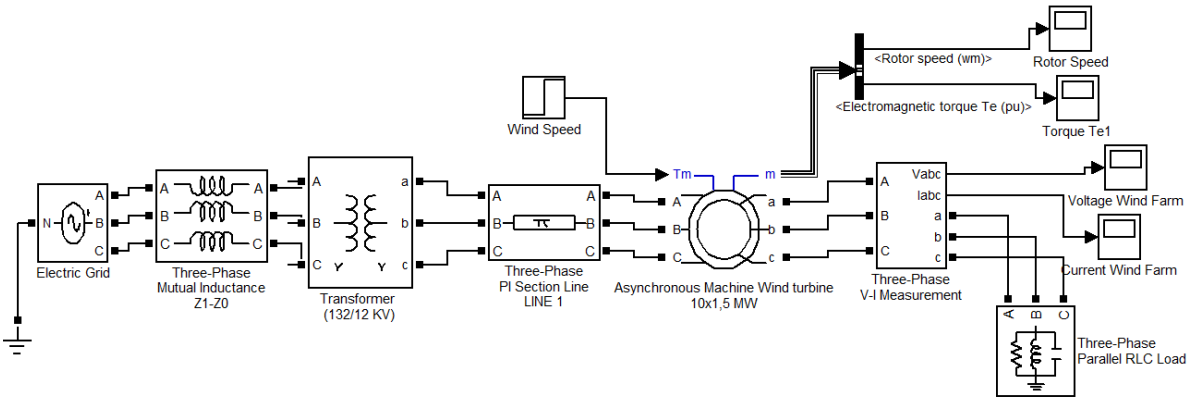

Figure 4.5. – Diagram of the 30 MW wind farm connected to the grid by SimPowerSystem software.

In the figure 4.4 the block diagram is able to measure the active and reactive power of a Double Fed Induction Generator (DFIG). So this block is used to know the response of the wind turbine because as it was said before the wind turbine used in this project is the AW-3000 of Acciona (Characteristics provided in the appendix A).

The program chosen is SimPowerSystem software and the parameters to measure with this diagram are:

- Wind turbine rotor currents and voltage.
- Wind turbine stator currents and voltage
- Rotor speed.

The diagram follows the Fig 29. The wind farm is connected to the grid via a line (Line 1) of 10 Km which finish in the transformation center.

All the data menus of the block parameters are attached in the appendix 3. And all the graphics of the system response are discussed in the chapter 4: discussions results.

The block diagram to know the harmonic perturbation that the wind farm introduces in the electric network is done with Simulink instead of SimPowerSystem.

In this case of attaching electricity generating station as a wind farm network with a harmonic content is done according with the EN61000-2-2. This standard “set” the harmonic content in the utility grid as shown in figure 4.6.

Harmonic number	1st	3rd	5th	7th	9th	11th	13th
Voltage	100%	5%	6%	5%	1.5%	3.5%	3%
Phase	178.2°	0°	0°	0°	0°	0°	0°

Figure 4.6. Harmonic content according with the EN61000-2-2 standard.

This table means that the first harmonic, also called fundamental harmonic, is the rated voltage. It is the useful voltage and it has 50 Hz. The others harmonics has the frequency that is achieved with this equation:

$$F = \text{Harmonic number} * 50 \text{ (Hz)}$$

So the third harmonic has 150 Hz and a voltage of 5 % of the normal value. If this value is more than 5 % the harmonic content is not meeting the standard EN61000-2-2. And the same applies with the following harmonics.

The Simulink implementation of this harmonic voltage source is shown in figure 4.7 and figure 4.8.

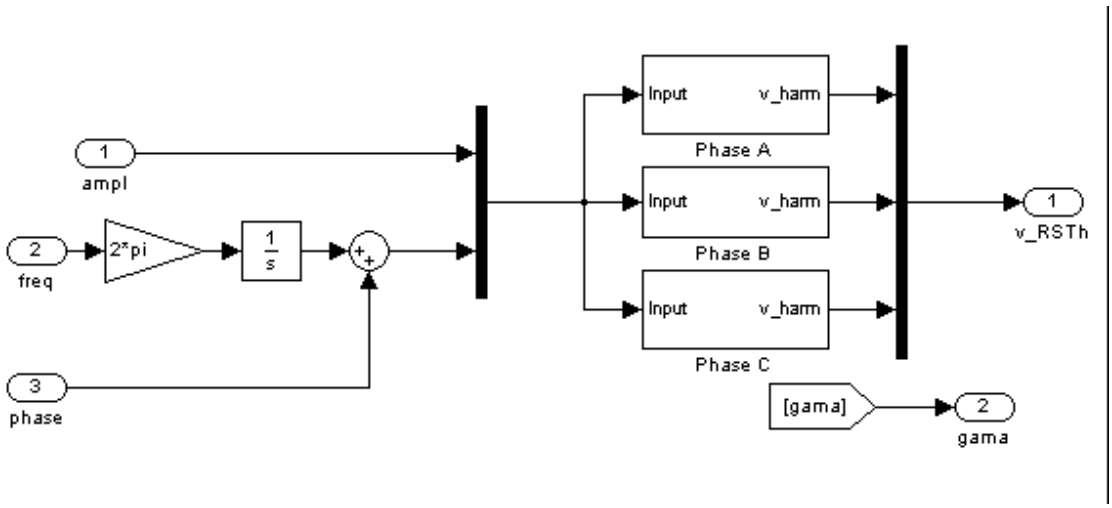

Figure 4.7. General Structure of the Harmonic Voltage Source in Simulink

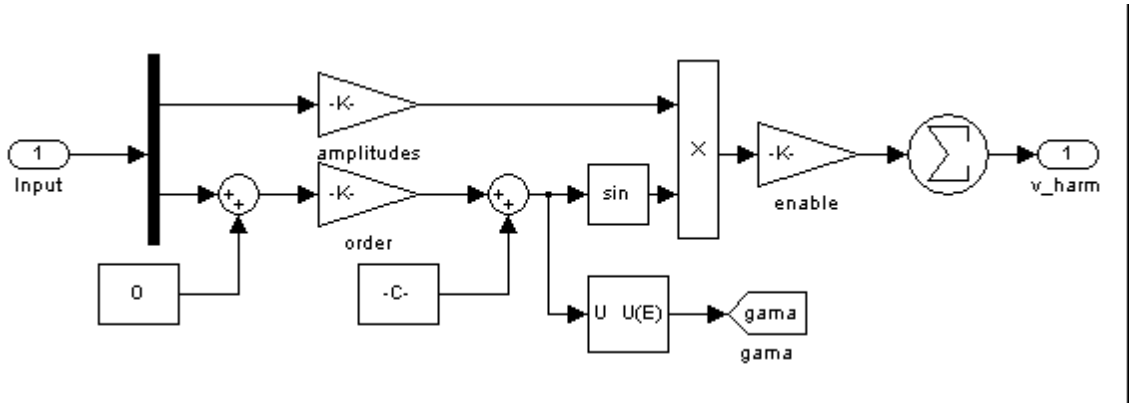

Figure 4.8. Simulink model of the harmonic voltage generator for one phase.

With these diagrams and with all the data is possible to measure the amount of harmonics the wind farm produce to the grid. The graphics and results are in the next chapter.

4.3.2. - Grid and wind turbine response when a grid fault happens

The wind farm has a lot of problems when a fault happens in the distribution system. The potential consequences are the runaway of the wind turbine with subsequent disconnection of the park or the deterioration of the quality of supply. The latter could lead to the destruction of the power electronics present in each turbine. Therefore all wind turbines have a sensible protection against the harmonics, the potential shorts circuits or the over voltage or voltage dips.

The bloc diagram to simulate a grid fault is quite similar to that shown in figure 4.5, but with the difference of the block called fault. It is possible to see this in the figure 4.9.

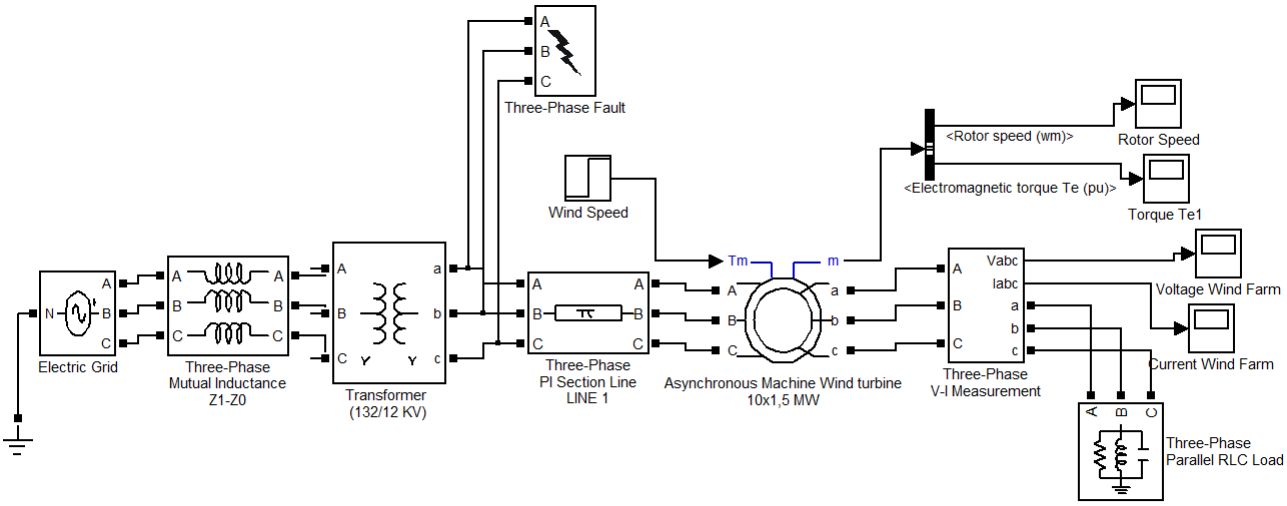

Figure 4.9. – Diagram of the 30 MW wind farm connected to the grid With a Three-Phase Fault.

In this case the parameters to study are the same that in the point 1, and to measure the harmonics the diagrams shown in the figure 4.7 and figure 4.8 are used too. To know the replies of the wind farm before a voltage dip the diagram is quite similar than the figure 4.5.

5. DISCUSSION RESULTS

In the previous chapter the block diagrams of the model have been done. In this paragraph the results of these simulations are shown. As it is said before there are two cases of study. First of all the normal connection of the wind farm to the electric grid is studied. And to complete this research the second situation is about the response of the grid when a voltage dip happens.

5.1.- Normal connection of the wind farm to the grid.

There are four values studied in this point. The stator and rotor currents, the voltage of the wind farm, the harmonics introduced in the grid and the rotor speed of one wind turbine.

- <u>Stator an rotor currents:</u>

The Figure 5.1 shows the current of the rotor and stator of one wind turbine. Because of the parallel connection of the ten wind turbines the graphics are more or less the same for all. So only is necessary to attached one graphic.

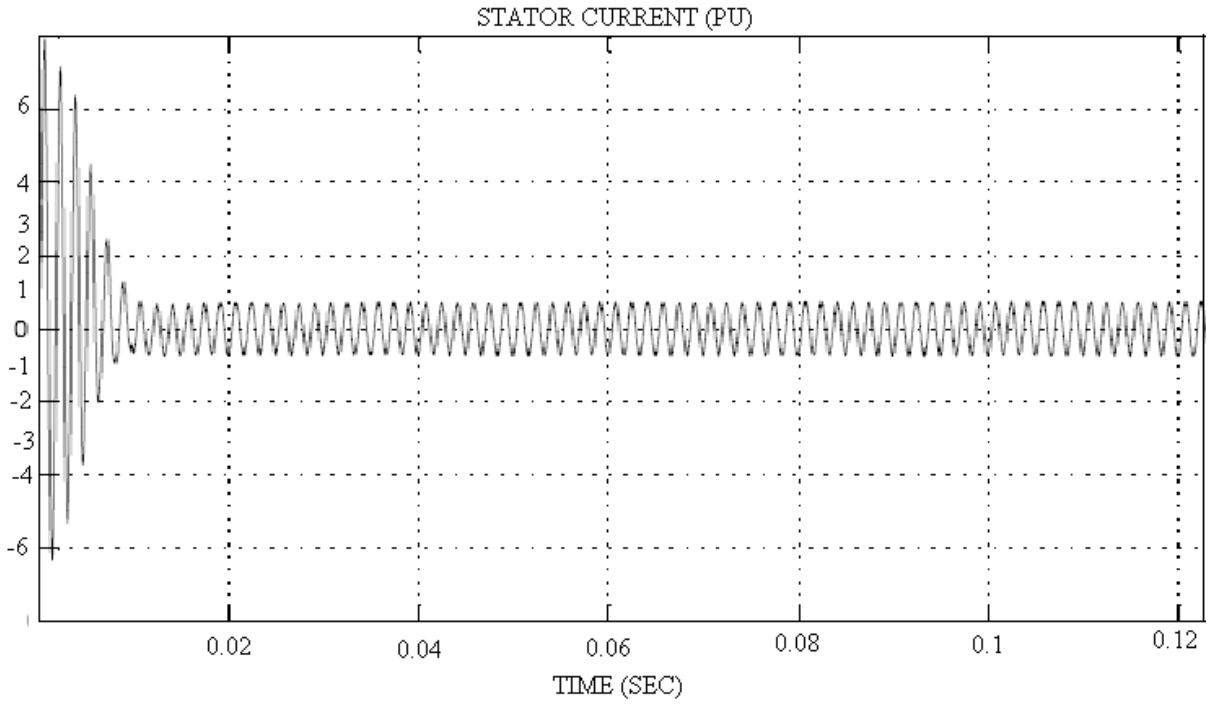

Figure 5.1. – Stator currents (pu) during balance condition.

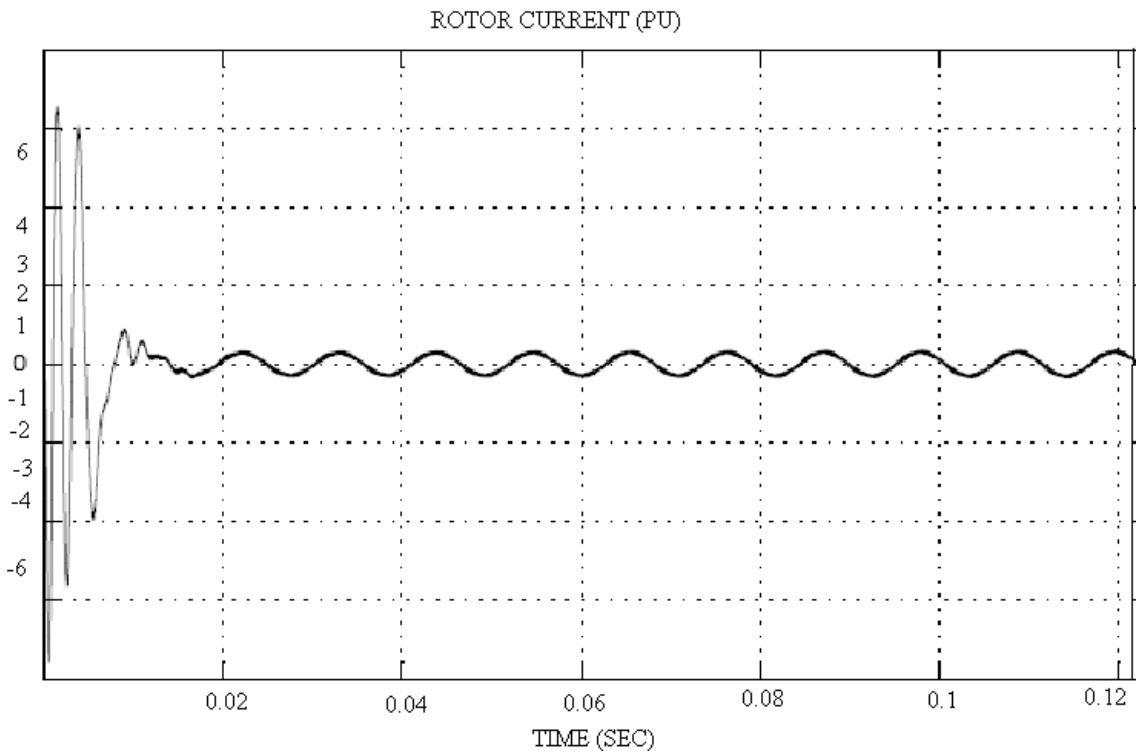

Figure 5.2. – Rotor current (pu) during balance condition.

As it is possible to see in the Figure 5.2 when the wind farm is connected there is a noise at the beginning. This noise lasts 0.2 seconds and then the stator and rotor currents of the wind farm are stabilized. This noise is due to the loads of the grid. When other load is connected, in this case the wind farm, an unbalance condition is made, but all the power electronics present in each wind farm correct this unbalance and the currents can be stabilized.

- Voltage of the entire wind farm.

The wind farm is connected to a transformation centre in a voltage of 12 KV. This centre is connected to the distributtion system at 132 KV. The voltage measured with this figure is in the low voltage part, 12 KV. Before the connection is done the voltage is a balanced system (figure 3.7). The three phases are balanced. It means that there is a difference between the three phases of 120 degrees. But when the wind farm is connected the proper balanced system is perturbed in some aspects.

The rated voltage is 12 KV (VRS). Is known that a sine wave shows the amplitud of the signal. The rated voltage and current in an AC electric system is not the higher

value of the sine signal. To know the value of the signal is neccesary to do the next calculate:

$$V\ (VRS) = \frac{\text{higher value}}{\sqrt{2}}$$

In the Fig. 32. The higher value is 20 KV at the beggining but after 0.03 seconds this value decrease at 17 KV aprox.

$$V_{Beggining} = \frac{20\ KV}{\sqrt{2}} = 14.14\ KV$$

$$V_{Normal} = \frac{17\ KV}{\sqrt{2}} = 12\ KV$$

Is posiblle to see how the balanced system has a noise at the beggining and an increase of 16 % (2 KV) of voltage. After 0.6 seconds the proper operation of the wind farm and the grid is achieved. But it has to be taken into account this increase of voltage at the beggining because all the protections have to be designed to withstand this increase.

Other aspect to consider is that in the first cycles the signal has a noise. It is because of the harmonics due to the conecction. In the next point this harmonics are described and discussed.

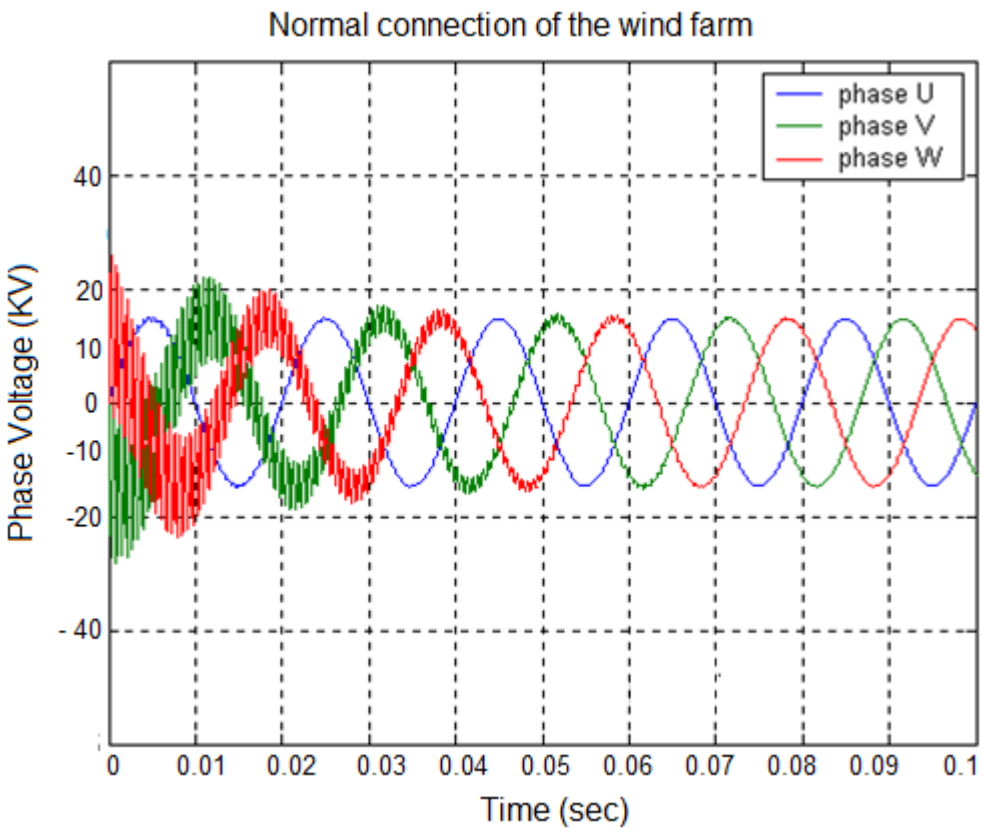

Fig. 32. Voltage of the wind farm in normal connection.

- Harmonics introduced in the electric grid. Hablar de estoooooo

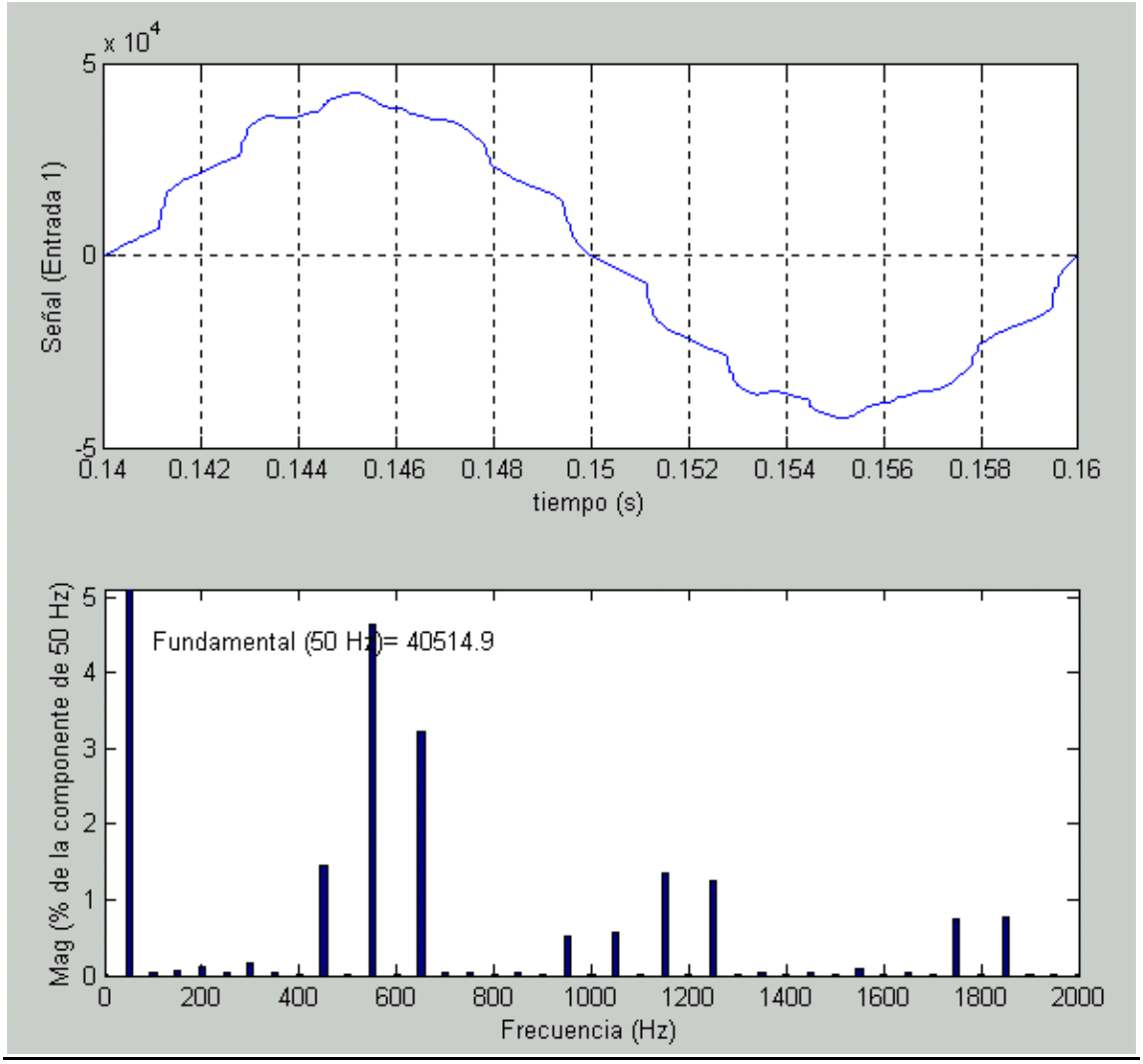

- <u>Rotor speed of one wind turbine.</u>

Firstly this graphic is not when the wind farm is connected. It is only the behavior of one wind turbine when it starts to run. When the wind farm is connected all the 10 wind turbines are in normal work. This response is important when one turbine was disconnected due to whatever reason and then it has to be connected again. In this research it is not contemplated but is good to know the rotor speed curve of one of these wind turbines.

The AW-3000 is a double feed induction generator, asynchronous and with 3 pairs of poles. It means that the rotor speed in normal connection has to be a little less than 1,000 rpm. This is because of the frequency an the pairs of poles:

$$\text{Speed (rpm)} = \frac{\text{Frequency (Hz)}*60}{pp} = \frac{50*60}{2} = 1000 \text{ rpm}$$

Due to the nature of this kind of generators there is a delay between the stator synchronous speed and the rotor speed, so the rotor speed is more or less 980 rpm in normal conditions; it can be seen in the Fig. 33.

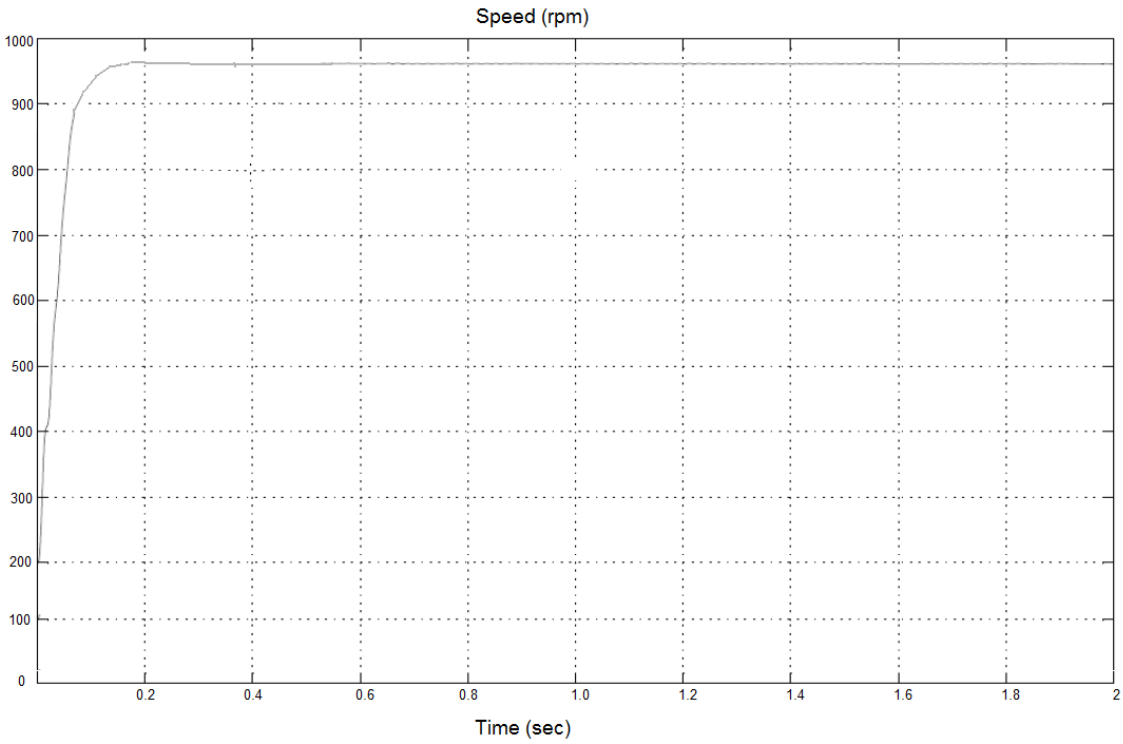

Fig. 33. Rotor speed of a wind turbine AW-3000.

5.2.- Response of the grid when a voltage dip happens.

This case of study is based in the replies of the Wind farm before a voltage dip. As it is said before the voltage dips are falls in the supply of one or more phases and its value oscillate between 90% and 1 % of the nominal voltage within 10 ms and 1 minute. It is due a big consumption of current due to the connection of large transformers and transient short circuit caused by earth faults due to branches of trees, water, snow, animals, and etc. Also the voltage dips are caused by the lightning strikes.

In this case (fig. 34.) the voltage dip has a value of 80 % of the nominal value and duration of 0.1 seconds. The current of the wind farm is measured in the transformation centre in the low side (12,000 V). It is possible to see how the current of the generation centre is perturbed. There is an increase of 30 % of the nominal value. In this short period of time the current system is unbalanced. It is very harmful for the electric system and the protections.

These currents can produce a lot of harmonics which may have different effects in the electric system.

- The effects of harmonics on transformers are:
    1. Increased copper losses.
    2. Increased iron losses.
    3. Possible resonance between the coils of the transformer and the capacitance of the line.
- The harmonics produced following effects on AC rotating machines:
    1. Increased heating due to losses in the iron and copper.
    2. Changes affecting electromagnetic torque.
    3. The efficiency of the machine.
    4. The torsion oscillations of the machine.
- Losses in cables and drivers.
- Malfunction of measurement devices.

So in this case the harmonics produced are shown in the figure 35.

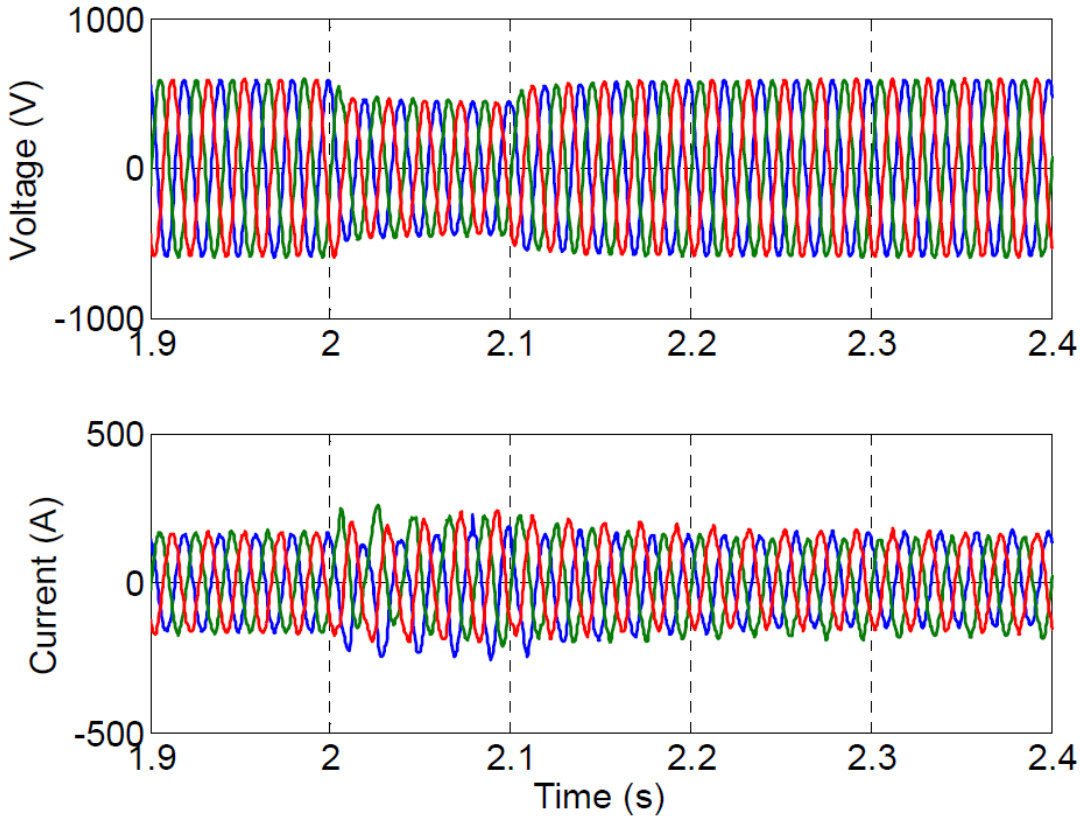

Fig. 34. Voltage and current of the wind farm due to a voltage dip.

Figura HARMONICSSSS

Fig 35. Harmonics produced for a voltage dip in the grid.

5.3.- Response of the Wind farm to a fault in the grid.

- Stator an rotor currents:

Besides tension holes there are other disturbances that may affect the proper operation of the wind farm. These disturbances are the faults of the electrical network. These failures can be phase to ground or phase to phase and can be given in one phase, two or all three at once. In our case study the fault is due to the contact of phase a with the ground, it has a duration of 0.01 seconds and the short circuit resistance is 0.01 ohms.

The fig. 36 shows the replies of the rotor and stator against this fault. The failure happens in the second 0.035 and finish in the time 0.045. Is possible to see that the currents have a perturbation, but when the fault is finished the normal operation of the wind turbines is achieved.

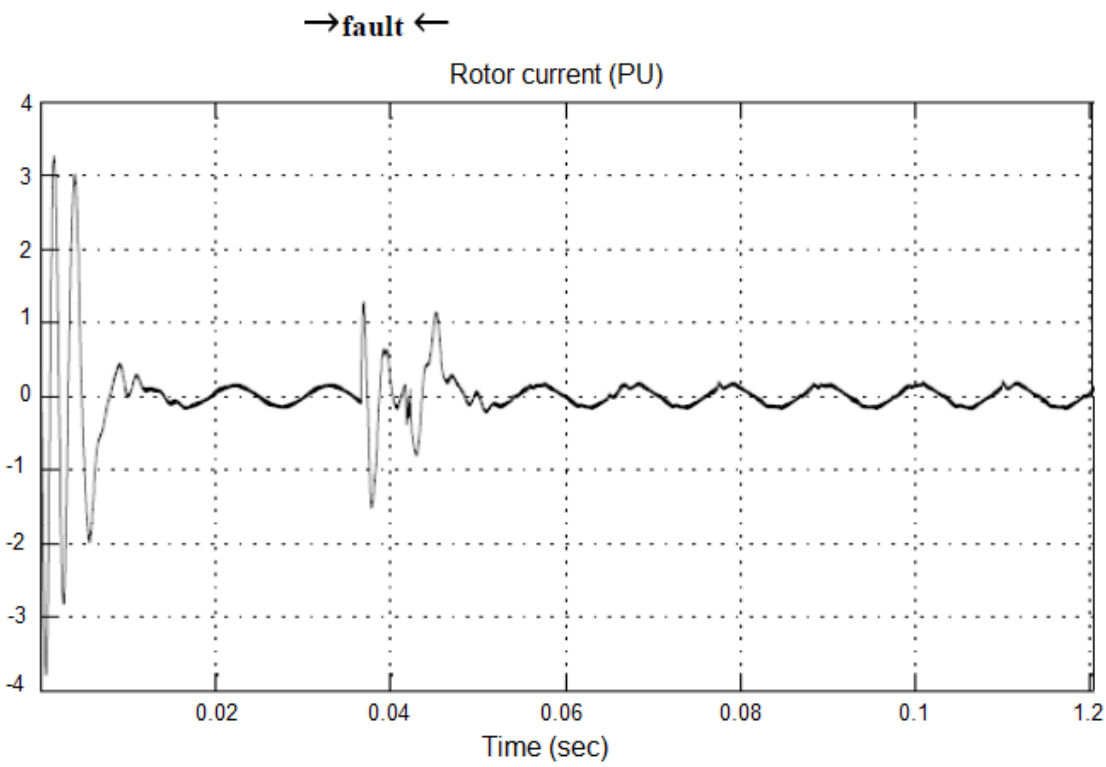

Fig. 36. Rotor current of the wind farm to a Fault of the grid.

The same response has the stator current. In the Fig. 37. This replies is shown.

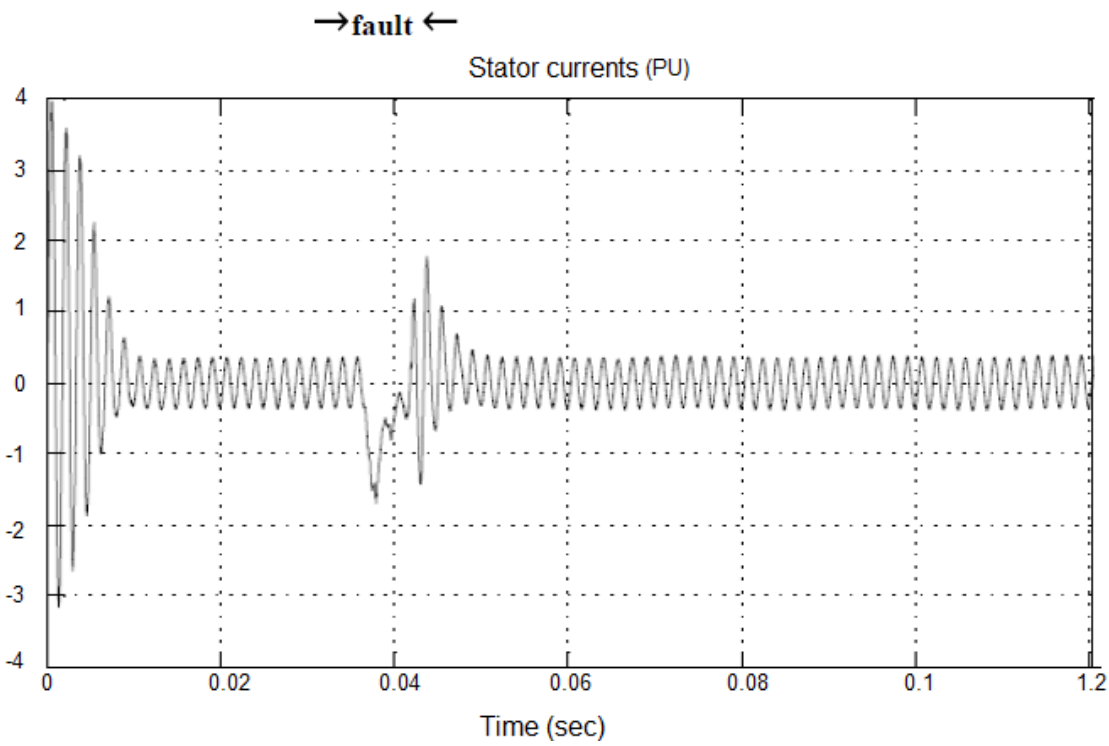

Fig. 37. Stator current of the wind farm to a Fault of the grid.

- <u>Voltage and currents of the entire wind farm.</u>

There are others consequences of the faults. This is for example the perturbations in the currents of the wind farm. In this case the three phase currents have an unbalanced condition during a few moments, exactly 0.05 seconds. In the Fig. 38. Is posibble to see this phenomenon.

The grid fault is placed in the second 0.035 so the currents of the entire wind farm start to be unbalanced in this time. There is a peak in one of the phases (coloured in green) which almost achieves the double value of normal current. The graphic is in per units measurements (Pu).

Then, after 0.1seconds of the start of the fault the wind farm is in normal operation again. The frequency is still 50 Hz, both currents and voltage. This is easy to see because of the cycles. One cycle of the sine wave has a duration of 0.02 seconds $(\frac{1}{50\ Hz})$.

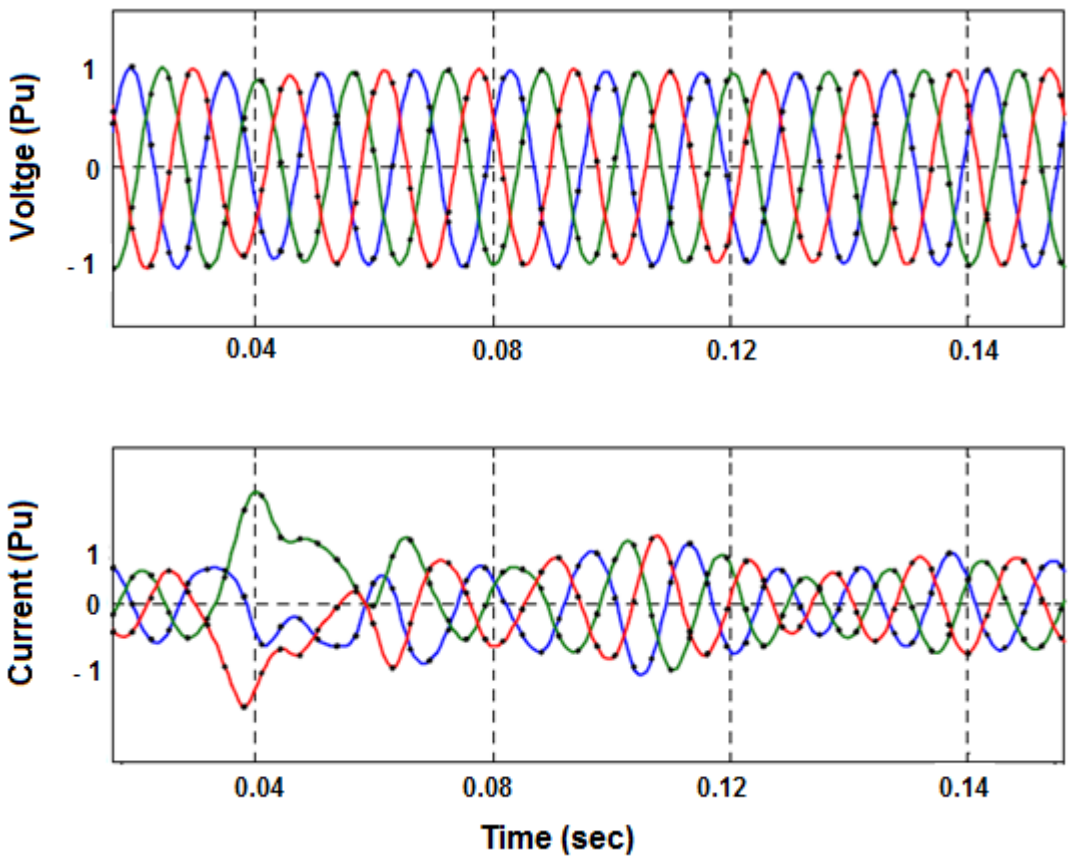

Fig. 38. Voltage and currents of the wind farm during a fault in the grid.

- <u>Rotor speed of one wind turbine.</u>

Because of the voltage dip the rotor speed has a decrease just in the moment of the dip, but when the normal value of the voltage is restored the curve follows the normal parameters.

The speed achieved is nearly 1,000 rpm. The Fig. 39. shows that.

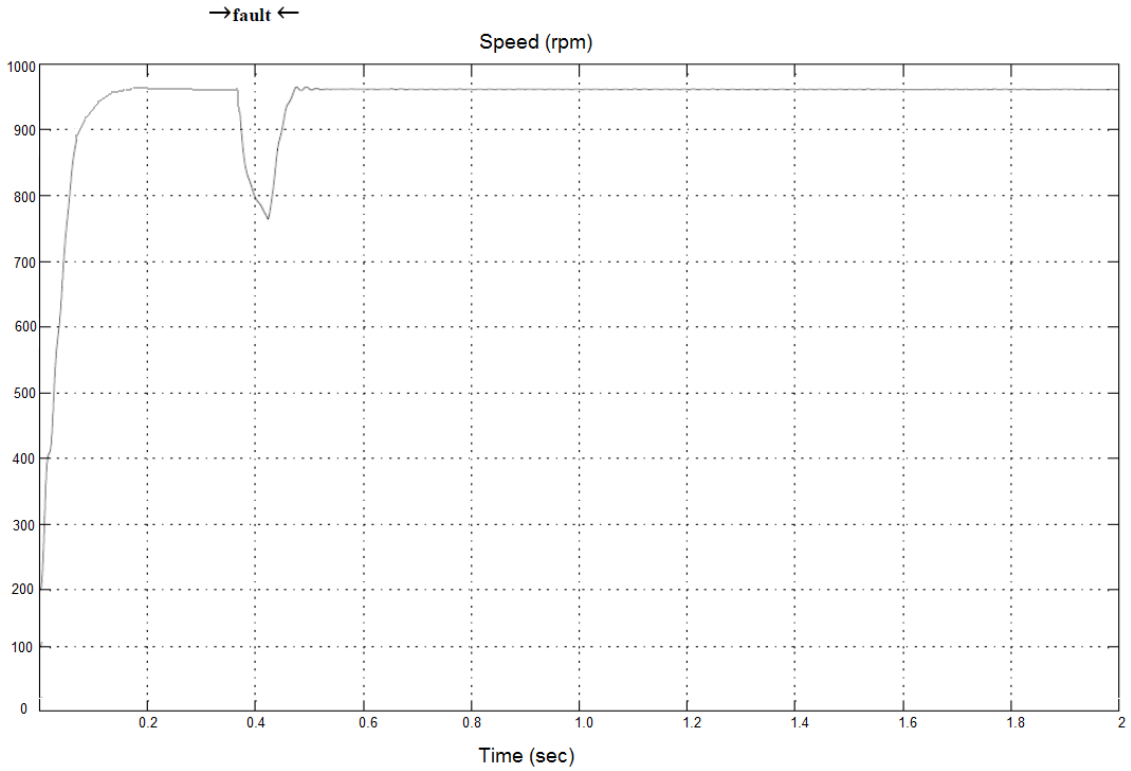

Fig. 39. Rotor speed against a fault.

CHAPTER 6: CONCLUSIONS

The recent project has versed in the connection of a wind farm to the electrical network of Wales. Not specified the exact location of it, but it says that the point of connection has to be in the distribution network of 132 KV. The data of the wind turbines have been caught of the catalogue of Acciona Wind power Ltd. The electrical network has been searched of previous work. This really is not very important because the main objective of this study was to make a simulation with Matlab / Simulink and their application SimPowerSystem. It has been necessary to make a comprehensive study on these programs to design a model for mediation of block diagrams. This model makes it possible to see the response of the network and the wind farm when linked, a voltage dip occurs and when there is fault electricity in the network. And parameters have been studying the park's electrical currents as well as a generator in particular harmonics produced, with its consequences, rotor speeds, etc...

It was possible to observe that there is a perturbation in the voltage and currents of the wind farm and the grid when these two systems are connected. Also it happen when a fault or a voltage dip has place in the grid. In the end this is just balancing thanks to all power electronic devices located in the processing centres and in the wind farms.

It is also possible to see the consequences of these perturbations. The main is the harmonics produced.

CAPTER 7: RECOMENDATIONS

LIST OF REFERENCES

[1] Scotish power, ltc. *SP Manweb*, long term development statement 2009/10-2013/14.

[2] "Large scale integration of wind energy in the European power supply", a report by EWEA (European wind energy association).

[3] Energy Networks Association, Engineering Recommendations and Technical Specifications.

[4] Rudion, K. Wind farms with DFIG as virtual power plants proceedings. Glasgow 2005.

[5] Pena R., Clare J.C., Asher G.M. "Doubly Fed Induction Generador using back-to-back PWM converters and its application to Variable – Speed Wind – Energy Generation", IEE Proc.-Electr. Power Appl., Vol 143, No. 3, May 1996.

[6] SimPowerSystems™ 5. User's Guide.

[7] Matlab & Simulink v.7.6.0. "Wind Turbine Doubly Fed Induction Generator (Average model)" –Help files].

Figures.

[3] Source: A. Badelin ISET, 2005. "Large scale integration of wind energy in the European power supply", a report by EWEA (European wind energy association).

LIST OF FIGURES

APPENDIX

1. - DESCRIPTION OF THE WIND TURBINE.

Wind turbine technical information. ACCIONA Wind power AW-3000:

AW-3000
NEW WIND TURBINE

Technical information

	AW-100/3000	AW-109/3000	AW-119/3000
Rotor diameter	**100 m.**	**109 m.**	**116 m.**
Wind class (IEC)	**IEC Ia**	**IEC IIa**	**IEC IIIa**

OPERATING DATA

Cut-in wind speed	4 m/s	3,5 m/s	3 m/s
Nominal power wind speed	11.7 m/s	11.1 m/s	10.6 m/s
Cut-out wind speed	25 m/s		20 m/s
Nominal power	3,000 kW		

COMPONENT DATA

Number of blades	3		
Orientation	Upwind		
Diameter	100 m	109 m	116 m
Swept area	7,864 m²	9,331 m²	10,568 m²
Rotational direction	Clockwise		
Nominal rotational speed	14.2 rpm	13.2 rpm	12.3 rpm
Power regulation Overspeed control	Full span blade pitch		
Rotor shaft tilt angle	5º		
Nominal tip speed	74.3 m/s	74.7 m/s	74.7 m/s
Cone angle	3º		

BLADES

Model	48.8	53.2	56.7
Material	GFRP		
Total length	48.8 m	53.2 m	56.7 m
Weight	10,400 kg/blade	11,540 kg/blade	12,280 kg/blade
Pitch	Full span		
Aerodynamic brake	Full feathering		

HUB

Hub type	Rigid
Material	Cast iron GJS 400 18U LT
Protection	Metalized Zn + Epoxy

PITCH SYSTEM

Pitch bearings	Double row four point contact
Actuation	Hydraulic
Linkage	Through hydraulic cylindre
Failsafes	Accumulators on hub

DRIVE TRAIN

Gearbox	3 stages: 2 planetary/helical		
Gearbox nominal power	3,000 kW		
Gearbox ratio	1:77	1:83	1:89
Input nominal speed	14.2 rpm	13.1 rpm	12.3 rpm
Output nominal speed	1.100 rpm		
Lubrication	Pressure and splash with oil cooler/oil filter		
Gearbox oil volume	600 Liters		
Condition Monitoring System	included		

ROTOR SHAFT

Type	Forged hollow shaft
Material	34 Cr Ni Mo 6
Supporting	2 bearings

MAIN SHAFT BEARINGS

Type	Double spherical roller bearings

PARKING BRAKE

Type	Single disk/Two callipers
Location	High Speed shaft

YAW SYSTEM

Type	Four point ball bearing
Slewing ring	External
Slewing ring/yaw drive pinion ration	11.21:1
Braking system	Disk + callipers

YAW GEARS AND MOTORS

Type	5 Planetary stages
Ratio	1:1451
Yaw rate	0.08 rpm
Motor types	4 Asynchronous poles
Voltage / Frequency	230/400 V - 50 Hz
Number of yaw gears	6

HYDRAULIC POWER UNIT

Voltage / Frequency	380 V / 50Hz

GENERATOR

Type	6 poles, double feeding
Insulation type (stator / rotor)	H /H
Rated power	3,000 kW
Degree of protection	IP 54
Frequency	50 / 60Hz (available)
Voltage	12,000 V
Speed range (50 Hz)	770-1,320 rpm 50 (Hz)/924-1,584 rpm 60 (Hz)

CONTROL SYSTEM

Type	Ingecon-W
Master processor	80 – 386.32 bits
Scada interface	OPMT
Power factor correction	Programmable by software

TOWER

Material	Concrete
Tower height (hub 100/120)	98.2 m/118.2 m
Access to tower	Door with lock system
Access to nacelle cabin	Ladder or lift
Weight (hub 100/120)	850 t/ 1,100 t
Foundation connection	Anchor bars embedded in the foundation and high quality grout

WEIGHT

Nacelle	118 t
Rotor (100 m)	66 t
Nacelle + hub	154 t

DIMENSIONS

Nacelle + Hub	
Lenght	17.5 m
Width	4.5 m
Height	4 m

AUTOMATIC LUBRICATION SYSTEM

Bearings	Pitch, yaw, main shaft and generator

-------- 132kV Cable
_____ 132kV OHL
-------- 132kV Cable
_____ 132kV OHL

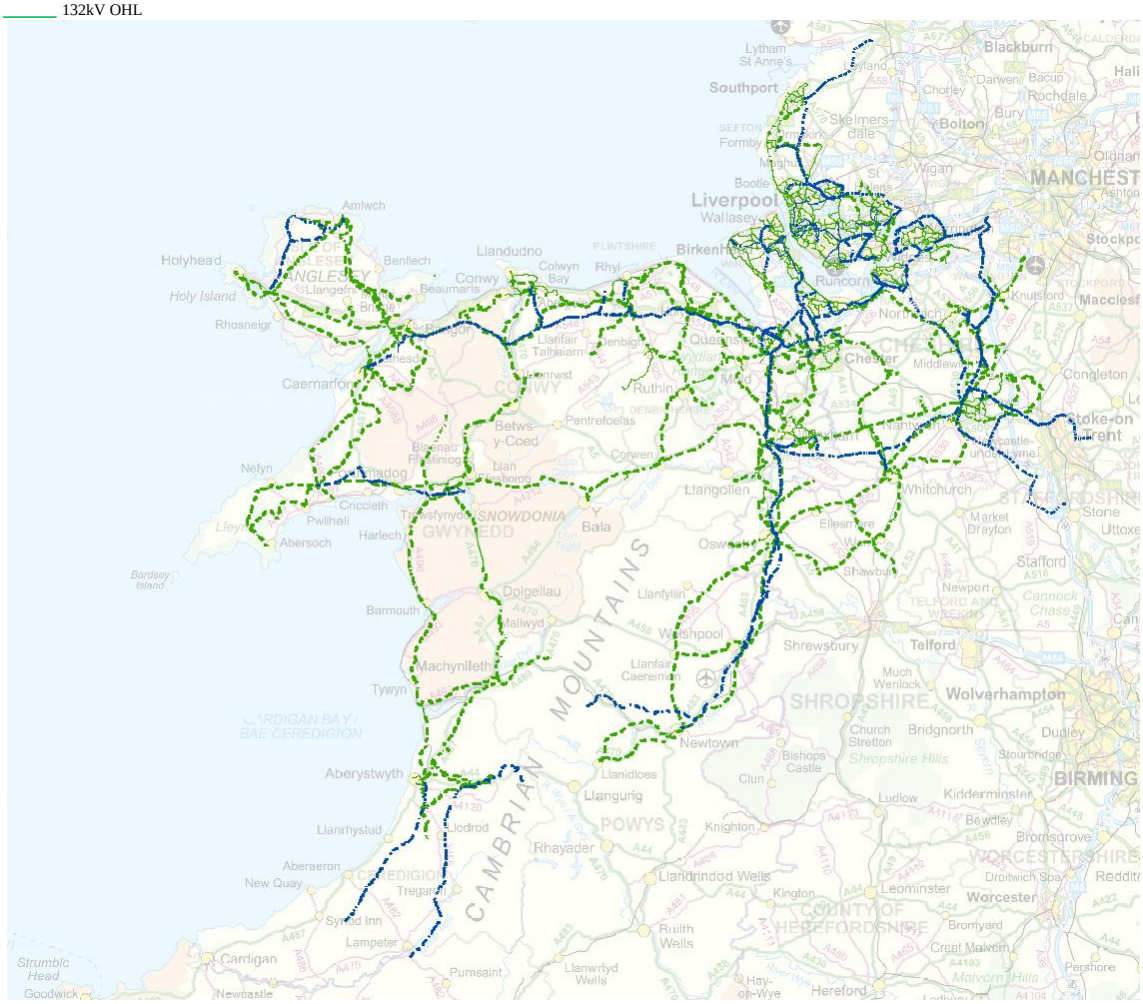

Figure [16]). - SP Manweb geographical area

.